DOE/NETL CARBON DIOXIDE CAPTURE AND STORAGE RD&D ROADMAP

DECEMBER 2010

DISCLAIMER

This report was prepared as an account of work sponsored by an agency of the United States Government. Neither the United States Government nor any agency thereof, nor any of their employees, makes any warranty, express or implied, or assumes any legal liability or responsibility for the accuracy, completeness, or usefulness of any information, apparatus, product, or process disclosed, or represents that its use would not infringe privately owned rights. Reference therein to any specific commercial product, process, or service by trade name, trademark, manufacturer, or otherwise does not necessarily constitute or imply its endorsement, recommendation, or favoring by the United States Government or any agency thereof. The views and opinions of authors expressed therein do not necessarily state or reflect those of the United States Government or any agency thereof.

DOE/NETL CARBON DIOXIDE CAPTURE AND STORAGE RD&D ROADMAP

DECEMBER 2010

NETL Contacts:

Jared P. Ciferno
Technology Manager, Existing Plants, Emissions and Capture
Strategic Center for Coal

John L. Litynski
Technology Manager, Sequestration
Strategic Center for Coal

Sean I. Plasynski, PhD
Director, Office of Coal and Power R&D
Strategic Center for Coal

NATIONAL ENERGY TECHNOLOGY LABORATORY
www.netl.doe.gov

ACKNOWLEDGEMENTS

This report was sponsored by the U.S. DOE's Existing Plants Program and Sequestration Program at the National Energy Technology Laboratory (NETL). The authors would like to express their appreciation to all those individuals who contributed to the successful preparation of the report. This especially includes Lynn Brickett, Director of Existing Plants Projects Division; Gary Stiegel, Director, Major Projects Division; and the following NETL R&D program area Technology Managers: Richard Dennis, Advanced Turbines; Daniel Driscoll, Fuels; Robert Romanosky, Advanced Research; Jenny Tennant, Advanced IGCC; and Shailesh Vora, SECA Fuel Cells. Special thanks to Robb Lenhart, IBM, and Beth Tori, NETL, for their work in preparing an earlier draft of the report. We would also like to acknowledge the invaluable critique of the draft report by Joe Giardina and Judy Gerba of Leonardo Technologies, Inc. The authors also want to thank Nick Fryer and Sara Lucas, Performance Results Corporation, for their work in providing the graphic design for the report.

THIS PAGE INTENTIONALLY LEFT BLANK

TABLE OF CONTENTS

CONTENTS

MESSAGE TO STAKEHOLDERS 2

CHAPTER 1: OVERVIEW 4

A. Global Climate Change – The Driver for CCS 5

B. What is CCS? 6

1. CO_2 Capture 7

2. CO_2 Compression and Transportation 8

3. CO_2 Storage 8

C. The DOE/NETL CCS RD&D Effort 10

1. CCS RD&D Goals 10

2. CCS RD&D Program Areas 11

3. CCS RD&D Time Line 13

D. American Recovery and Reinvestment Act Impact on CCS RD&D 15

E. International Collaboration 16

F. Interagency Coordination 18

CHAPTER 2: CO_2 CAPTURE AND COMPRESSION 20

A. Introduction 21

B. General Approaches for CO_2 Capture 21

1. Pre-Combustion Capture 21

2. Post-Combustion Capture 23

3. Oxy-Combustion Capture 24

C. Cost and Performance Issues of Currently Available Capture Technologies 24

1. Cost-Effectiveness 24

2. Capture and Compression Parasitic Power 25

3. Integration with Existing Plant Infrastructure 26

4. Cooling Water Requirements 26

5. CO_2 Capture Impacts on Existing Plant Retrofits 27

D. The Role of RD&D in Reducing the Cost of CO_2 Capture 27

E. The RD&D Process – Progress Over Time 28

F. CO_2 Capture Technology RD&D Goals and Targets 30

1. Pre-Combustion RD&D Targets 30

2. Post-Combustion and Oxy-Combustion RD&D Targets 30

G. DOE/NETL CO_2 Capture Technology Pathways 31

1. Pre-Combustion CO_2 Capture – Advanced Technology Approaches 31

2. Post-Combustion CO_2 Capture – Advanced Technology Approaches 35

3. Oxy-Combustion CO_2 Capture – Advanced Technology Approaches 37

4. Chemical Looping Combustion 39

H. CO_2 Compression 39
1. CO_2 Properties and Compression 39
2. Novel Concepts for CO_2 Compression 40
3. Supersonic Shock Wave Compression Technology 40
I. Pilot-Scale Development – the National Carbon Capture Center 40
J. Other DOE/NETL CO_2 Capture Activities 42
1. DOE/NETL Systems Analyses 42
2. Carbon Capture Simulation Initiative (CCSI) 42
3. University of North Dakota's Energy & Environmental Research Center (UNDEERC) 42
4. CANMET Energy Technology Center 42

CHAPTER 3: CO_2 TRANSPORTATION AND STORAGE 44
A. CO_2 Transportation 45
B. CO_2 Storage 47
1. Improved Fundamental Understanding 48
2. Technology Development 51
C. Monitoring, Verification, and Accounting 51
1. Atmospheric and Remote Sensing 51
2. Near-Surface Monitoring 52
3. Wellbore Monitoring 52
4. Deep Subsurface Monitoring 52
5. Accounting Protocols 52
D. Simulation and Risk Assessment 52
1. Mathematical Models Development/Verification 53
2. Improved Risk Assessment Protocols 54
E. Regional Carbon Sequestration Partnerships and other Regional Projects 55
1. Characterization Phase 56
2. Validation Phase 57
3. Development Phase 57
4. Education and Outreach 61
F. International CO_2 Storage Activities. 61

GLOSSARY 62

REFERENCES 66

LIST OF TABLES

Table 1-1. CCS RD&D Program Area Targets 12
Table 1-2. CCPI CO_2 Capture Demonstration Projects 14
Table 1-3. Industrial Carbon Capture and Storage Initiative Projects 15
Table 1-4. Examples of CO_2 Capture Projects Located Outside of the United States 17

Table 2-1. Pre-Combustion Technology Advantages and Challenges 31
Table 2-2. Post-Combustion Technology Advantages and Challenges 35
Table 2-3. Oxy-Combustion Technology Advantages and Challenges 38
Table 2-4. Chemical Looping Technology Advantages and Challenges 39

Table 3-1. Program Targets for Carbon Storage Technologies 48
Table 3-2. International CCS Research Projects 61

LIST OF FIGURES

Figure 1-1. U.S. Coal-Fired Electric Power Generation CO_2 Emission Projections 5
Figure 1-2. EPRI Analysis of Potential CO_2 Emission Reduction Strategies 6
Figure 1-3. Carbon Capture and Storage Process 6
Figure 1-4. Block Diagram Illustrating Power Plant with Pre-Combustion CO_2 Capture 7
Figure 1-5. Block Diagram Illustrating Power Plant with Post-Combustion CO_2 Capture 7
Figure 1-6. Block Diagram Illustrating Power Plant with Oxy-Combustion CO_2 Capture 8
Figure 1-7. Location of U.S. CO_2 Pipelines 9
Figure 1-8. Potential U.S. Geological Storage Formations 9
Figure 1-9. DOE's CCS RD&D Overview 11
Figure 1-10. CCS RD&D Timeline 13

Figure 2-1. Process Schematic of Pre-Combustion Capture 22
Figure 2-2. Schematic Diagram of Selexol Process for Pre-Combustion CO_2 Capture 22
Figure 2-3. Process Schematic of Post-Combustion Capture 23
Figure 2-4. Schematic Diagram of MEA Process for Post-Combustion CO_2 Capture 23
Figure 2-5. Process Schematic of Oxy-Combustion Capture 24
Figure 2-6. Comparison of Cost Metrics for Different Types and Configurations of Power Plants Equipped with CCS 25
Figure 2-7. Net Plant Efficiency with and without CO_2 Capture and Compression 25
Figure 2-8. Potential Effect of CO_2 Capture and Compression Parasitic Power on Net Power Output for the AEP Conesville Power Station Unit No. 5 26
Figure 2-9. Use of Let-Down Turbine for Integration of CO_2 Capture with Steam Cycle 26
Figure 2-10. Potential Effect of CO_2 Capture and Compression on Relative Water Usage for New PC and IGCC Plants 27
Figure 2-11. Relationship Between COE and Thermodynamic Efficiency of the CO_2 Capture Process 28
Figure 2-12. Stages of Advanced CO_2 Capture Technology RD&D 29
Figure 2-13. DOE/NETL CO_2 Capture Technology Development 31
Figure 2-14. Chemical Looping Process 39
Figure 2-15. NCCC Pre-combustion CO_2 Capture Slipstream Test Units 41
Figure 2-16. NCCC Post-Combustion CO_2 Capture Slipstream Test Units 41

Figure 3-1. CO_2 Transportation Pathways and Challenges 45
Figure 3-2. Current Power Plants and Potential CO_2 Storage Sites 45
Figure 3-3. Distance to Storage Sites or CO_2 Pipelines for U.S. Coal-Based Power Plants 46
Figure 3-4. Current CO_2 Pipelines in the United States 47
Figure 3-5. CO_2 Storage Research and Technology Implementation Pathways and Critical Challenges 47
Figure 3-6. CO_2 Trapping Mechanisms 50
Figure 3-7. Critical Parameters for all Mechanisms of CO_2 Trapping 53
Figure 3-8. Risk Breakdown Structure for a Commercial-Scale Geologic Storage Project 54
Figure 3-9. Estimates of CO_2 Storage Capacity for Geologic Sequestration Sites 56
Figure 3-10. Regional Carbon Sequestration Partnership Phases 57
Figure 3-11a. RCSP Validation Phase Tests 58
Figure 3-11b. RSCP Validation Phase Tests – Key 59
Figure 3-12. Approximate Timeline for RCSP Development Phase and Research Stages 60

PREPARED BY:

NATIONAL ENERGY TECHNOLOGY LABORATORY

Jared Ciferno

John Litynski

Sean Plasynski

And

James Murphy, Leonardo Technologies, Inc.

Gregson Vaux, Leonardo Technologies, Inc.

Ron Munson, Leonardo Technologies, Inc.

John Marano, J.M. Energy Consulting, Inc.

THIS PAGE INTENTIONALLY LEFT BLANK

MESSAGE TO STAKEHOLDERS

> "Rapid commercial development and deployment of clean coal technologies, particularly carbon capture and storage, will help position the United States as a leader in the global clean energy race."
>
> President Obama
> February 3, 2010

The U.S. Department of Energy's (DOE) Clean Coal Research Program is focused on the integrated development of carbon capture and storage (CCS) technologies to affordably and efficiently sequester carbon dioxide (CO_2) from coal-based power plants. The program is gathering the data, building the knowledge base, and developing the advanced technology platforms needed to prove that CCS can be a viable climate change mitigation strategy, thus ensuring that coal, a secure and affordable energy resource, remains available to power a sustainable economy.

DOE's overarching mission is to advance the national, economic, and energy security of the United States. To that end, the DOE Office of Fossil Energy's (FE) mission is to ensure the availability of ultra-clean (near-zero emissions), abundant, low-cost domestic energy from coal to fuel economic prosperity, strengthen energy security, and enhance environmental quality. The DOE/FE's Clean Coal Research Program is implemented by the National Energy Technology Laboratory (NETL). Program contributions include the research, development, and demonstration (RD&D) of clean coal technologies that are highly efficient, achieve near-zero emissions (including carbon), and are commercially deployable in a competitive energy market.

One of President Obama's objectives is to reduce U.S. greenhouse gas (GHG) emissions to 20 percent below 1990 levels by 2020. In May 2009, U.S. Energy Secretary Steven Chu announced DOE's priorities to drive the President's agenda, including positioning the United States to lead on climate change policy, technology, and science. Further, the American Recovery and Reinvestment Act of 2009 (Recovery Act) provides more than $3 billion for fossil energy research to develop and demonstrate CCS technology in partnership with industry, and to transition this technology to industry for deployment and commercialization. Through fossil energy-related provisions in the Recovery Act and annual appropriations, the development of CCS is being pursued to meet future energy needs. Specific programs associated with the application of Recovery Act funding include: expansion of Round 3 of the Clean Coal Power Initiative (CCPI); development of advanced technology for large-scale CCS from industrial sources; characterization of geologic sequestration sites; implementation of geologic sequestration training and research; acceleration of the deployment of advanced coal gasification-based power production technologies linked with CCS; a CCS demonstration using oxy-combustion technology for CO_2 capture under the FutureGen 2.0 Initiative; and acceleration of CCS technology development through the Carbon Capture and Storage Simulation Initiative.

The United States has a long-standing reliance on huge reserves of domestic coal for electric power generation. Coal-fired power plants are reliable, affordable, and currently supply about 50 percent of the Nation's electricity generation. Along the way, the power industry has successfully installed pollution control

equipment to comply with emissions regulations that have continuously tightened since the passage of the Clean Air Act in 1970. There is a growing consensus that steps must be taken to significantly reduce GHG emissions from energy use throughout the world at a pace consistent to stabilize atmospheric concentrations of CO_2, and that CCS is a promising option for addressing this challenge. The DOE Clean Coal Research Program is a major component of the global activities needed to widely deploy coal power plants with cost-effective CCS. However, CCS will need to be a reasonable-cost option for major types of coals and in a variety of geologic storage settings. The cost of deploying currently available CCS technologies is very high (e.g., approximately an 80 percent increase in the cost of electricity for a supercritical pulverized coal [PC] plant with post-combustion CO_2 capture).

As a result, the DOE Fossil Energy Research Program is developing a variety of major cost-reduction technology innovations that could help make CCS a viable domestic and global option. A focused portfolio of technologies is being pursued along multiple technology paths to mitigate the risks inherent to RD&D efforts. Further, the program plan encompasses RD&D across a wide scale, integrating advances and lessons learned from fundamental research, technology development, and large-scale demonstration. DOE envisions having an advanced CCS technology portfolio ready by 2020 for large-scale demonstration that provides for the safe, cost-effective carbon management that will meet our Nation's goals for reducing GHG emissions. A large part of this program is NETL's domestic and international transfer of technologies and processes. NETL sponsors the Regional Carbon Sequestration Partnerships (RCSPs), a government-industry effort to determine the technologies, regulations, and infrastructure changes needed to achieve CO_2 management in various regions of the United States and Canada. In addition, the majority of DOE's collaboration with international research organizations, including the Carbon Sequestration Leadership Forum (CSLF), focuses on technologies that can handle the scale of capture required by commercial power plants, by far the largest stationary producers of CO_2.

> "To prevent the worst effects of climate change, we must accelerate our efforts to capture and store carbon in a safe and cost-effective way. This funding will both create jobs now and help position the United States to lead the world in CCS technologies, which will be in increasing demand in the years ahead."
>
> Energy Secretary Steven Chu
> May 15, 2009

New technological solutions are urgently needed. The United States can no longer afford the luxury of conventional, long-lead times for RD&D to bear results. New approaches must emphasize rapid commercialization of efficient, economic solutions that minimize CO_2 emissions. On February 3, 2010, President Obama established an Interagency Task Force on Carbon Capture and Storage that was charged with proposing a plan to overcome the barriers to the widespread, cost-effective deployment of CCS within 10 years. The Task Force issued its final report in August 2010, which acknowledged the importance of DOE/NETL's CCS RD&D efforts. The success of DOE research and related program activities will enable CCS technologies to overcome a multitude of economic, social, and technical challenges including cost-effective CO_2 capture, compression, transport, and storage through successful CCS integration with power generation systems; effective CO_2 monitoring and verification; permanence of underground CO_2 storage; and public acceptance. Through these technological advances, the United States will continue to have access to safe, reliable, and affordable energy from fossil fuels. This document provides a roadmap for NETL's CCS RD&D effort. NETL recognizes the critical need to act quickly and invites our stakeholders to fully participate. We invite your comments, suggestions, and inquiries.

CHAPTER 1: OVERVIEW

A. Global Climate Change – The Driver for CCS

The combustion of fossil fuels for electricity generation plays an integral role in the energy security and global economic competitiveness of the United States. According to Energy Information Administration (EIA) estimates, fossil fuels accounted for approximately 71 percent of total U.S. electricity generation in 2008. However, fossil fuel combustion results in the emission of large quantities of CO_2 such that the U.S. power generation sector produced more than 40 percent of total U.S. anthropogenic CO_2 emissions in 2008. It now appears likely that Federal legislation and/or regulation could soon be enacted that would limit CO_2 emissions from the U.S. power generation sector in order to stabilize atmospheric concentrations of CO_2 and address concerns that anthropogenic emission of GHG, including CO_2, is contributing to global climate change. While it is not clear what specific rules, regulations, or targets may be put in place, it is highly probable that emissions of CO_2 from these power plants will be targeted for reduction.

The majority of current U.S. power generation sector CO_2 emissions result from the combustion of coal. According to EIA estimates, more than 1 billion tons of coal were consumed by the U.S. power generation sector in 2008 and accounted for almost 50 percent of total U.S. electricity generation. The resulting 1.9 billion metric tons of CO_2 emissions comprised more than 80 percent from the power generation sector and almost 34 percent of the 5.8 billion metric tons of total U.S. anthropogenic CO_2 emissions in 2008. Moreover, as shown in Figure 1-1, EIA estimates that almost 95 percent of the coal-based CO_2 emissions projected to be released from today through 2030 will originate from existing coal-based power plants. Therefore, both existing and new coal-based power plants would likely be targeted for reduction should Federal legislation and/or regulation be enacted to reduce CO_2 emissions from the power sector.

> "While other climate mitigation options exist – such as energy efficiency improvements, a switch to less carbon-intensive fuels, nuclear power, and renewable energy sources – CCS is considered by many to be a crucial component of any U.S. approach or strategy for addressing the climate change problem, particularly given the United States' current reliance on coal for almost half of its electricity production."
>
> General Accountability Office
> September 2008

Even allowing for retirements of older, less efficient plants, almost all atmospheric CO_2 stabilization scenarios would require significant reductions in CO_2 from the existing population of fossil fuel power plants. There are several options available to decrease CO_2 emissions from the power sector, including demand-side conservation, potential increases in low-cost renewable energy supplies, and implementation of CCS on existing coal-based power plants. Recent studies of potential GHG mitigation strategies conducted by Princeton, Electric Power Research Institute (EPRI), and others found that a minimum of 90 percent CO_2 reduction from fossil fuel power plants is required to make a significant impact on stabilizing atmospheric CO_2 levels. For example, Figure 1-2 presents the results of an EPRI analysis, which shows that while a full spectrum of energy technologies need deployed to reduce U.S. power sector CO_2 emissions, wide-scale deployment of CCS provides the largest share of those reductions. Therefore, in order to retain fossil fuels as a viable energy source, CCS technologies must play a central role. To that end, cost-effective and efficient CCS technologies will need to be developed and demonstrated at full-scale prior to their availability for widespread commercial deployment.

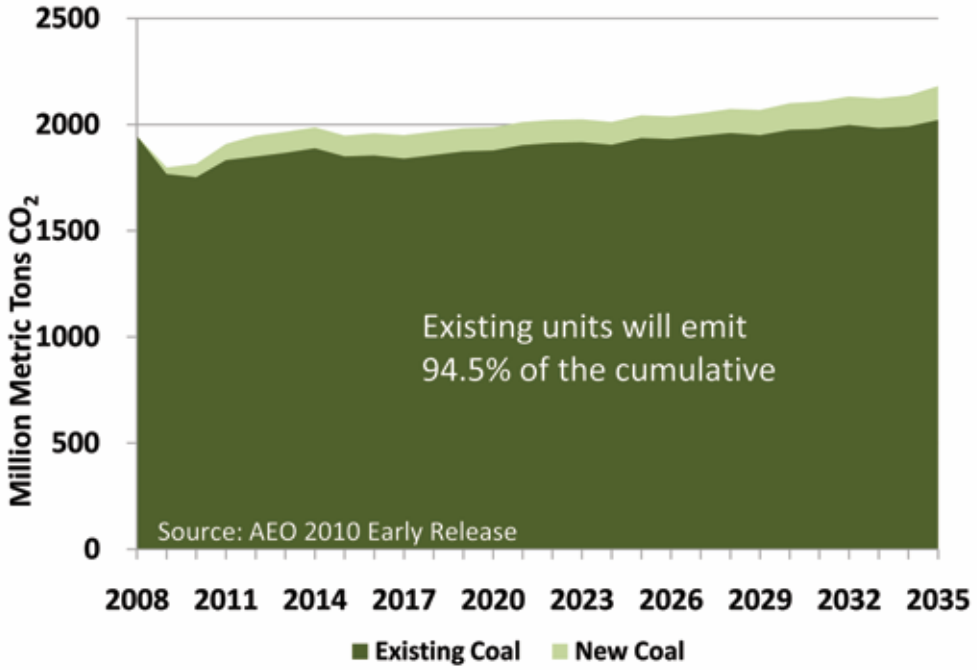

Figure 1-1. U.S. Coal-Fired Electric Power Generation CO_2 Emission Projections

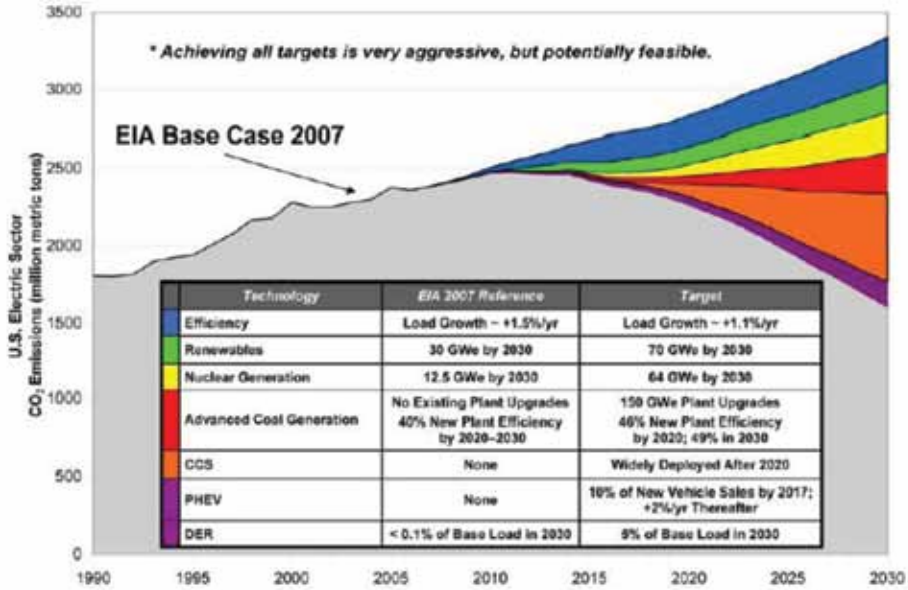

Technology	EIA 2007 Reference	Target
Efficiency	Load Growth ~ +1.5%/yr	Load Growth ~ +1.1%/yr
Renewables	30 GWe by 2030	70 GWe by 2030
Nuclear Generation	12.5 GWe by 2030	64 GWe by 2030
Advanced Coal Generation	No Existing Plant Upgrades 40% New Plant Efficiency by 2020–2030	150 GWe Plant Upgrades 46% New Plant Efficiency by 2020; 49% in 2030
CCS	None	Widely Deployed After 2020
PHEV	None	10% of New Vehicle Sales by 2017; +2%/yr Thereafter
DER	< 0.1% of Base Load in 2030	9% of Base Load in 2030

Figure 1-2. EPRI Analysis of Potential CO_2 Emission Reduction Strategies

B. What is CCS?

CCS encompasses the entire life-cycle process for controlling CO_2 emissions from large-scale point sources such as coal-based power plants. By cost-effectively capturing CO_2 before it is emitted to the atmosphere and then permanently storing it, coal can continue to be used without restricting economic growth while still reducing carbon emissions to the atmosphere. CCS includes four primary steps: CO_2 capture, compression, transport, and storage. The CCS process is shown schematically in Figure 1-3. The three general categories of CO_2 capture technologies that can be applied to coal-based power plants are pre-combustion, post-combustion, and oxy-combustion. Pre-combustion capture is applicable to integrated gasification combined cycle (IGCC) power plants, while post- and oxy-combustion capture could be applied to conventional PC-fired power plants. The captured CO_2 could be transported via pipeline or tanker car to a permanent storage site. The CO_2 would then be stored underground in geologic formations such as depleted oil and gas fields, saline formations, and unmineable coal seams. The following is a brief description of each of these steps. A more detailed discussion of these concepts is presented in subsequent chapters of this report.

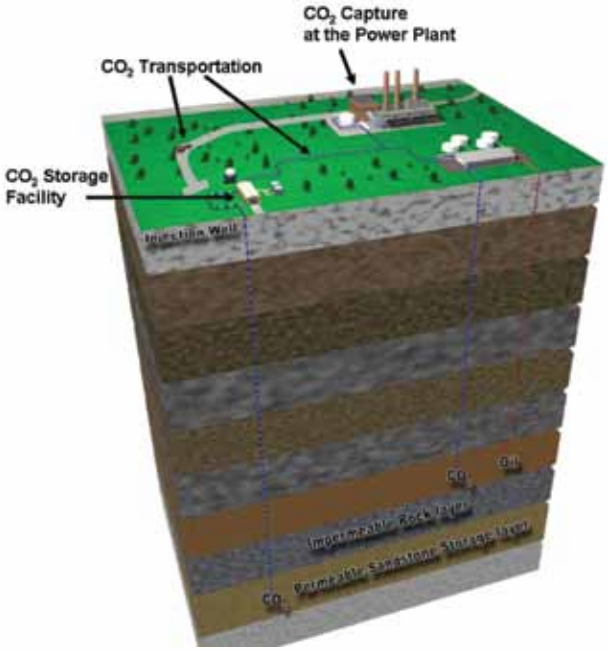

Figure 1-3. Carbon Capture and Storage Process

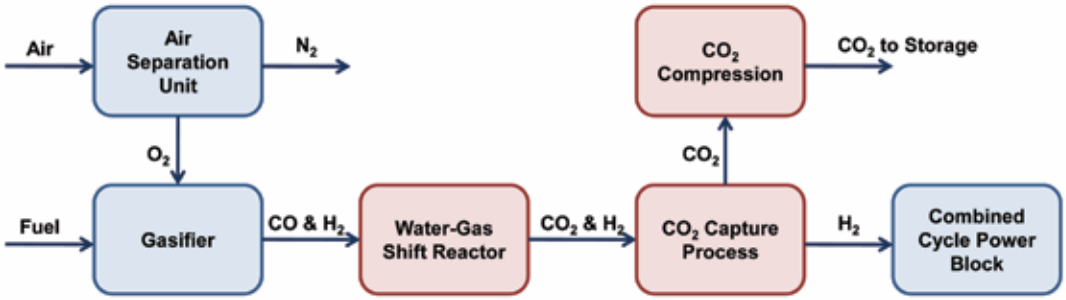

Figure 1-4. Block Diagram Illustrating Power Plant with Pre-Combustion CO_2 Capture

1. CO_2 Capture

CCS begins with the separation and capture of CO_2 from coal-based power plant flue gas or syngas. These same capture technologies are also applicable to natural gas and oil-fired power plants, as well as other industrial CO_2 sources. There are commercially available CO_2 capture technologies that are currently being used in various industrial applications. However, in their current state of development these technologies are not ready for implementation on coal-based power plants for three primary reasons: (1) they have not been demonstrated at the larger scale necessary for power plant application; (2) the parasitic loads (steam and power) required to support CO_2 capture would decrease power generating capacity by approximately one-third; and (3) if successfully scaled-up, they would not be cost effective at their current level of process development. Other major technical challenges associated with the application of existing CO_2 capture technologies to coal-based power plants include parasitic power requirements, energy integration, flue gas contaminants, water use, CO_2 compression, and oxygen supply for pre- and oxy-combustion systems.

Pre-combustion capture is mainly applicable to gasification plants, where fuel (coal, biomass, or coal/biomass mixture) is converted into gaseous components by applying heat under pressure in the presence of steam and sub-stoichiometric oxygen (O_2). A simplified block diagram illustrating the pre-combustion CO_2 capture process is shown in Figure 1-4. By carefully controlling the amount of O_2, only a portion of the fuel burns to provide the heat necessary to decompose the fuel and produce synthesis gas (syngas), a mixture of hydrogen (H_2) and carbon monoxide (CO), and minor amounts of other gaseous constituents. To enable pre-combustion capture, the syngas is further processed in a water-gas-shift (WGS) reactor, which converts CO into CO_2 while producing additional H_2, thus increasing the CO_2 and H_2 concentrations. An acid gas removal system can then be used to separate the CO_2 from the H_2. Physical solvent-based technologies currently used in industrial applications are being considered for this purpose. After CO_2 removal, the H_2-rich syngas is used as a fuel in a combustion turbine combined cycle to generate electricity.

Post-combustion CO_2 capture is primarily applicable to conventional coal-fired, oil-fired or gas-fired power plants, but could also be applicable to IGCC and natural gas combined cycle (NGCC) flue gas capture. A simplified block diagram illustrating the post-combustion CO_2 capture process is shown in Figure 1-5. In a typical coal-fired power plant, fuel is burned with air in a boiler to produce steam that drives a turbine/generator to produce electricity. Flue gas from the boiler consists mostly of nitrogen and CO_2. The CO_2 capture process would be located downstream of the conventional pollutant controls for nitrogen oxide (NO_x), particulate matter (PM), and sulfur dioxide (SO_2). Chemical solvent-based technologies currently used in industrial applications are being considered for this purpose. The chemical

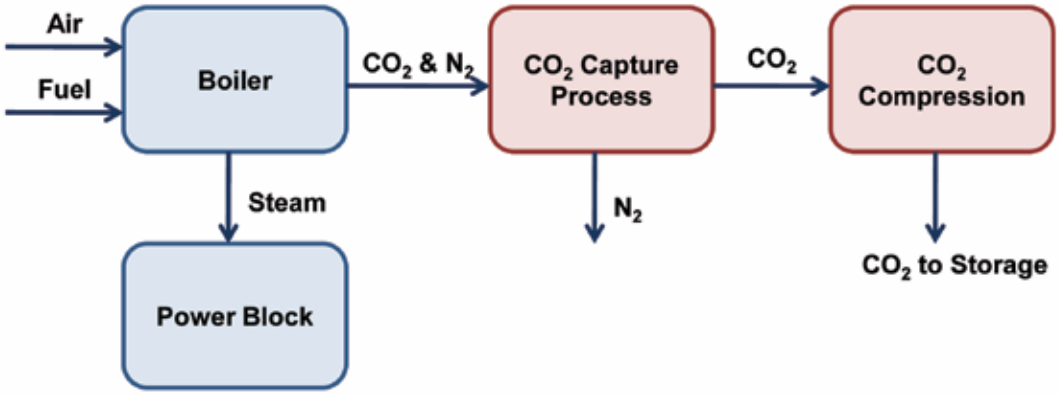

Figure 1-5. Block Diagram Illustrating Power Plant with Post-Combustion CO_2 Capture

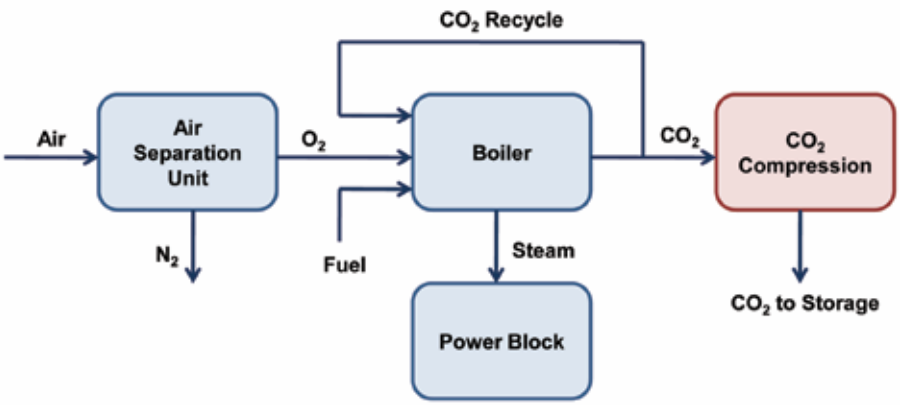

Figure 1-6. Block Diagram Illustrating Power Plant with Oxy-Combustion CO_2 Capture

solvent process requires the extraction of a relatively large volume of low-pressure steam from the power plant's steam cycle, which decreases the gross electrical generation of the plant. The steam is required for release of the captured CO_2 and regeneration of the solvent. Separating CO_2 from this flue gas is challenging for several reasons: a high volume of gas must be treated (~2 million cubic feet per minute for a 550-megawatt electric [MWe] plant); the CO_2 is dilute (between 12 and 14 percent CO_2); the flue gas is at atmospheric pressure; trace impurities (PM, SO_2, NO_x, etc.) can degrade chemical solvent; and compressing captured CO_2 from near-atmospheric pressure to pipeline pressure (about 2,200 pounds per square inch absolute [psia]) requires a large auxiliary power load.

Oxy-combustion is applicable to both new and existing coal-fired power plants. Oxy-combustion systems for CO_2 capture rely on combusting coal with relatively pure oxygen diluted with recycled CO_2 or CO_2/steam mixtures. Under these conditions, the primary products of combustion are water and CO_2, with the CO_2 separated by condensing the water and removing any other gas constituents that infiltrated the combustion system. A simplified block diagram illustrating the oxy-combustion CO_2 capture process is shown in Figure 1-6. Oxy-combustion produces a highly concentrated CO_2 stream (~60 percent), which is separated from H_2O vapor by condensing the H_2O through cooling and compression. An additional purification stage for the highly concentrated CO_2 flue gas may be necessary to produce a CO_2 stream that meets transportation and storage requirements. This purification step should have significantly less cost than a conventional post-combustion capture system due to the high CO_2 concentration and reduced flue gas volume. However, the appeal of oxy-combustion is tempered by a few key challenges, namely the capital cost and energy consumption for cryogenic air separation unit (ASU) operation, boiler air infiltration that dilutes the flue gas with nitrogen (N_2), and excess O_2 contained in the concentrated CO_2 stream. Flue gas recycle (~70 to 80 percent) is necessary for oxy-combustion retrofit to existing air-fired boilers in order to approximate the boiler combustion and heat transfer characteristics of combustion with air.

2. CO_2 Compression and Transportation

The phrase "carbon capture and storage" is the most commonly used way to express the overall process for the CO_2 emissions control system for fossil-fuel power generation. However, this expression references only two of the four major steps in the CCS process; the other two important steps are compressing the CO_2 after capture to a supercritical liquid (required for transport and storage) and transporting the CO_2 from the power plant to the storage site. DOE/NETL has included these often overlooked steps in its comprehensive RD&D efforts.

Once the CO_2 gas has been captured, the volume must be reduced to cost-effectively transport and store it. Either compression or a combination of refrigeration/pumping is done to convert the CO_2 gas to a supercritical fluid and it is then transported from the power plant to a selected location for permanent, safe underground storage or beneficial reuse, such as enhanced oil recovery (EOR). Pipelines for transporting nearly 30 million tons per year of CO_2 for EOR are available in some regions of the United States, including the Southeast and Southwest regions and the Rocky Mountains. Figure 1-7 shows the location of current and proposed CO_2 pipelines in the United States.

However, new pipelines, monitoring systems, piping systems, pumping equipment, and wells will be needed in most regions for the establishment of a successful CCS industry. Since a pipeline infrastructure will be required that affects numerous stakeholders (e.g., land owners, nearby residents, pipeline companies, storage site owners, power plants, environmental groups), DOE/NETL is also examining the associated legislative, regulatory, policy, and funding issues that might impact the deployment of pipeline technologies.

3. CO_2 Storage

There is considerable potential for retrofitting CCS technologies to existing coal-based power plants. According to the Carbon Sequestration Atlas of the United States and Canada, more than 40 percent of the existing U.S. coal-based power plant capacity is located directly above potential geologic sequestration sites. This includes almost 150 power plant sites, or nearly one-sixth of the total U.S. CO_2 emissions. By retrofitting CO_2 capture technology to coal-based power plants near geologic storage sites, billions of tons of CO_2 could be permanently sequestered over the remaining life of the existing fleet.

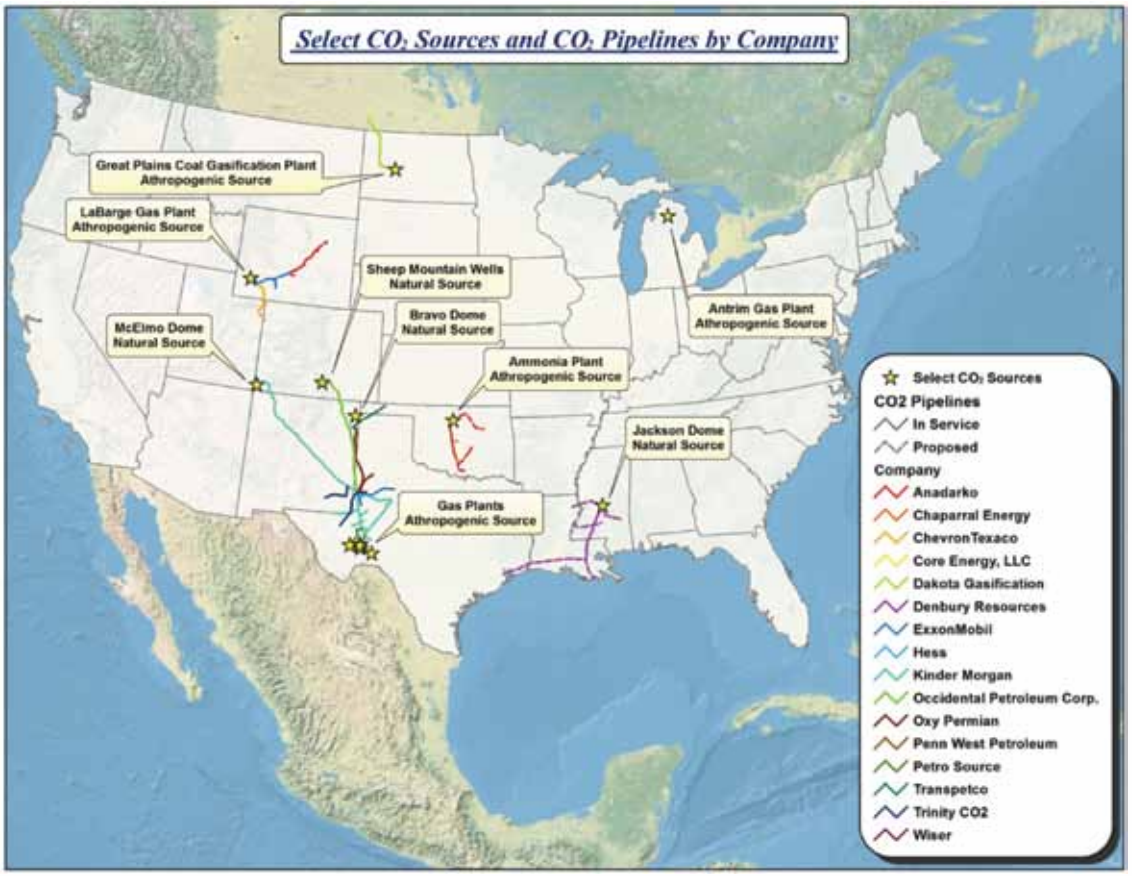

Figure 1-7. Location of U.S. CO_2 Pipelines

As shown in Figure 1-8, the United States has a vast potential of geologic storage options, with the estimated CO_2 storage capacity well in excess of likely future needs.[2] However, it is important to demonstrate and confirm the safe, effective, long-term geologic storage (permanence) of CO_2.

Geologic storage involves the injection of CO_2 into underground formations that have the ability to securely contain the CO_2 over long periods. The primary objective of DOE research in this area is to develop technologies to cost-effectively store CO_2 in geologic formations and monitor its movement and behavior while showing its permanence and safe storage. This involves developing an improved understanding of CO_2 hydrologic flow, trapping mechanisms, geomechanical impacts, and geochemical reactions within the formation, as well as developing and testing simulation models and other tools. Experience gained from field tests will facilitate the development of a series of CCS-related best practice manuals (BPMs) to ensure that CO_2 storage is secure and environmentally acceptable and does not impair the geologic integrity of underground formations. To achieve its geologic storage objectives, DOE is engaged in numerous research activities in a variety of potential CO_2 storage sites with different geologic classes of reservoir depending on their depositional environments. There are 11 storage formation classes and 2 seal classes which need to be adequately tested.[3] These formations contain fluids such as oil and gas and saline water. These tests help to better understand the trapping mechanisms, effects of heterogeneity, chemical reactions with rocks and formation fwluids, and integrity of seals.

Monitoring, verification, and accounting (MVA) capabilities will be critical to ensuring the long-term viability of CCS—satisfying both technical and regulatory requirements. Monitoring and verification encompass the ability to measure the amount of CO_2 stored at a specific storage site, to monitor the site for leaks, to track the location of the underground CO_2 plume, to verify that the CO_2 is stored permanently, validate simulations, and optimize injection operations and mitigation strategies. A key challenge for carbon storage is the development of robust, equitable, and transparent accounting procedures with the flexibility to ad-

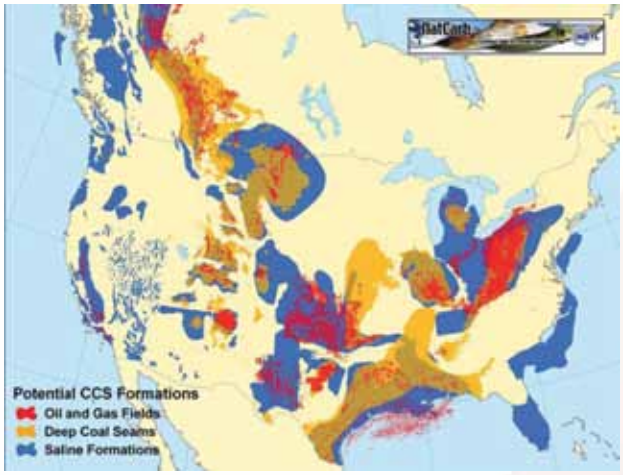

Figure 1-8. Potential U.S. Geological Storage Formations

just to future regulatory and market situations. A successful MVA effort will enable storage project developers to obtain permits while ensuring that human health and safety are not adversely impacted and preventing potential damage to the host ecosystem. MVA also enables emissions reduction credits trading, should a domestic program be established.

Simulation and risk assessment of CO_2 storage is also an important component of DOE's CCS Core RD&D effort. Existing numerical models that simulate geochemical, geomechanical, and flow are limited by the scale and coupled effects on storage of CO_2 in deep geologic formations. Refinements, coupling of models, and validation of these models at field project locations are necessary in the future. Identifying and quantifying risks are also key to developing effective risk management strategies and permitting CCS projects.

The nationwide network of RCSPs is tasked with determining the most suitable technologies that help to provide data that can shape regulatory needs for CCS in different areas of the United States and Canada. Activities conducted under the RCSP field tests include site selection, CO_2 geologic injection, monitoring, public outreach, and regulatory compliance. This work is being conducted under three phases: characterization, validation, and development. Under the Characterization Phase, site selection and characterization activities were completed by the RCSPs. During the Validation Phase, the RCSPs focused on developing field tests in a variety of geologic carbon storage sites and indirect sinks to validate the efficacy of CCS technologies. In the Development Phase, the RCSPs are conducting large-scale field testing of CO_2 injection into geologic formations to improve model predictions concerning the behavior of injected CO_2 at scale, establish the engineering and scientific processes for successfully implementing and validating long-term safe storage of sequestered carbon, and achieve cost-effective integration with power plant and other large emission sources for capture. However, these large-scale CCS advanced field tests may experience a near-term challenge in securing a sufficient supply of CO_2 for long-term injection and evaluation. Adequate storage-quality CO_2 will not be available from power plant sources in the near term at all test storage sites. To address the current time constraints, many large-scale field tests will be initiated using CO_2 from already-developed industrial byproduct plants or natural sources. Upon successful demonstration of CCS at the commercial scale, future CCS ventures will derive CO_2 from previously identified large emission sources.

C. The DOE/NETL CCS RD&D Effort

DOE's CCS RD&D effort is conducted under the overarching Fossil Energy Coal Research Program. The Coal Research Program is gathering the data, building the knowledge base, and developing the advanced technology platforms needed to prove that CCS can be a viable strategy to reduce atmospheric concentrations of CO_2, thus ensuring that coal, a secure and affordable energy resource, remains available to power a sustainable economy. The program is administered by DOE's FE and implemented by NETL through contracted research activities and onsite research at NETL. Research projects are carried out under various award mechanisms – including partnerships, cooperative agreements, and financial assistance grants – with corporations, small businesses, universities, nonprofit organizations, and other national laboratories and government agencies.

A major focus of the program is on the integrated development of CCS technologies to affordably and efficiently sequester CO_2 from coal-based power plants. The program is addressing the key technology challenges that confront the wide-scale deployment of CCS through research on cost-effective capture technologies; MVA technologies to ensure permanent storage; permitting issues; liability issues; public outreach; and infrastructure needs. In addition to development of CCS technologies, program activities are also focused on high-priority CCS enabling technologies, such as advanced IGCC, advanced hydrogen turbines, fuels conversion, and fuel cells. These research areas provide the supporting technology base for all CCS development. Figure 1-9 depicts the overall timeline for the RD&D effort, which involves pursuing advanced CCS technology from the fundamental/applied stage through pilot-scale so that full-scale demonstrations can begin by 2020. The RD&D effort will produce the data and knowledge needed to establish the technology base, reduce implementation risks by industry, and enable broader commercial deployment of CCS to begin by 2030.

1. CCS RD&D Goals

DOE's CCS RD&D effort is pursuing a portfolio of technologies along multiple technology paths to mitigate the risks inherent to new technology research efforts. The CCS effort encompasses RD&D across a wide scale, integrating advances and lessons learned from fundamental research, technology development, and commercial-scale demonstration. The success of this effort will enable cost-effective implementation of CCS technologies throughout the power generation sector.

A portion of the CCS RD&D effort is focused on developing advanced technology options that dramatically lower the cost of capturing CO_2 from fossil fuel energy plants compared to today's available capture technologies. DOE/NETL estimates that using today's commercially available CCS technologies would add around 80 percent to the cost of electricity for a new PC plant, and around 35 percent to the cost of electricity for a new advanced gasification-based plant. The CCS RD&D effort is aggressively pursuing developments to reduce these costs to a less than 30 percent increase in the cost of electricity for PC power plants and a less than 10 percent increase in the cost of electricity for new gasification-based power plants. To accomplish these goals, DOE/NETL has adopted a comprehensive, multi-pronged approach to its CCS RD&D effort. As discussed previously, this research can be categorized into three primary pathways: pre-combustion, post-combustion, and oxy-combustion. This re-

NETL Coal Research Program

Mission

"Ensure the availability of near-zero atmospheric emissions, abundant, affordable, domestic energy (including hydrogen) to fuel economic prosperity, strengthen energy security, and enhance environmental quality."

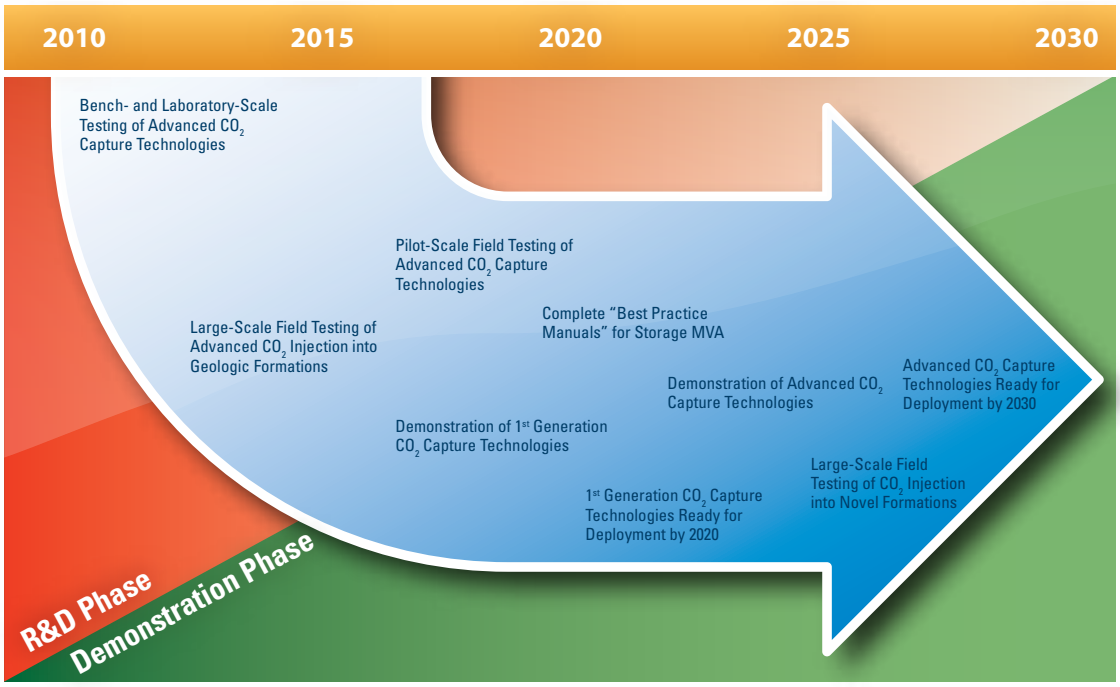

Figure 1-9. DOE's CCS RD&D Overview

search includes a wide range of technology approaches including solvents, sorbent, membranes, and oxy-combustion concepts. These efforts will produce meaningful improvements to state-of-the-art technologies and seek to develop revolutionary concepts, such as metal organic frameworks (MOFs), ionic liquids (ILs), and chemical looping.

Another important aspect of the CCS RD&D effort are the RCSPs and other regional CCS projects. Geographic differences in fossil fuel use and potential storage sites across the United States dictate the use of regional approaches in addressing CCS. The RCSPs – each comprised of state agencies, universities, and private companies – form a "capacity building" enterprise with the goal of developing the knowledge base and infrastructure that would be needed to support the wide-scale deployment of CCS technologies. The RCSPs are drilling wells and injecting large quantities (more than 1 million tonnes/year in some cases) of CO_2 to validate the potential of key storage locations throughout the country. Substantial progress has occurred in the area of MVA with the development and refinement of technologies to better understand storage stability, permanence, and the characteristics of CO_2 migration. The sequestration goal is to inject millions of metric tons of CO_2 into geologic formations to demonstrate the potential of these formations to sequester carbon and be able to show the CO_2 remains securely stored. The outcome of the RCSPs and other CO_2 storage tests and R&D will be a complete set of Best Practice Manuals for site selection, characterization, operation, and closure practices. Reaching these goals requires an integrated RD&D plan that will advance fundamental CCS technologies and prepare them for commercial-scale development.

However, advanced technologies developed in the CCS RD&D effort need to be tested at full scale in an integrated facility before they are ready for commercial deployment. Three elements of the RD&D effort – CCPI, Industrial Carbon Capture and Storage (ICCS), and FutureGen—are designed to demonstrate technologies at different levels of maturity and integration. The demonstration aspects of the effort have been enhanced significantly through the Recovery Act, which will be discussed in the next section. CCPI demonstrates advanced clean coal technologies for use in new and existing power generation facilities, particularly technologies that can significantly reduce the high current cost of CCS. ICCS supports demonstration projects and advancements in capture technologies designed to mitigate CO_2 emissions from large industrial point sources such as cement plants, refineries, and methanol plants. Candidate technologies, including those "graduating" from the RD&D effort, will be demonstrated at sufficient scale to evaluate performance in a commercial setting.

2. CCS RD&D Program Areas

Currently, the DOE/NETL Coal Research Program comprises 10 distinct program areas: Innovations for Existing Plants (IEP), Advanced IGCC, Advanced Turbines, Carbon Sequestration (CS), Solid State Energy Conversion Alliance (SECA) Fuel Cells, Fuels, Advanced Research (AR), CCPI, FutureGen, and ICCS. Each program area has specific targets that contribute to DOE's CCS RD&D effort, either through direct capture and storage of GHGs or through significant gains in power plant efficiency. Table 1-1 provides a summary of these program targets based on DOE's Fiscal Year (FY) 2011 Congressional Budget Request. The IEP program area (also known as "Existing Plants, Emissions & Capture") focuses on developing post- and oxy-combustion CO_2 capture technologies and advanced compression technologies that are applicable to new and existing PC power plants. The CS program area plays a lead role in pre-combustion CO_2 emissions control for IGCC power plants and CO_2 storage technology development with a focus on geological sequestration and its associated MVA. Additional RD&D of pre-combustion

CO_2 capture technologies is being conducted under the IGCC and Fuels program areas. The bulk of this RD&D is focused on advanced membrane-based systems for the separation of H_2 and CO_2 in coal-derived syngas. The RD&D of new breakthrough concepts for CO_2 capture that could lead to dramatic improvements in cost and performance relative to today's technologies is being performed both internally, through DOE/NETL's Office of Research and Development (ORD), and externally, through the AR program area. As discussed previously, the CCPI and ICCS programs are designed to provide incentives for the early deployment of advanced CO_2 capture technologies. CCPI serves as the demonstration stage of CO_2 capture technology RD&D on coal-based power plant sector deployment, whereas the ICCC program demonstrates CO_2 capture technology for the industrial sector. In addition, DOE/NETL's Office of Program Planning & Analysis (OPPA) is conducting technical-economic analyses to establish the baseline cost and performance for current CO_2 capture technologies; track the cost and performance of new CO_2 capture technologies under development relative to DOE/NETL's goals; and determine the feasibility of novel capture and compression technologies.

Table 1-1. CCS RD&D Program Area Targets

PROGRAM AREA TARGETS	
Fiscal Year	Targets
INNOVATIONS FOR EXISTING PLANTS	
By 2013	Complete bench-scale (1 to 1,000 standard cubic feet per minute (scfm)) development of advanced post-combustion and oxy-combustion CO_2 capture technologies.
By 2016	Complete field testing on flue gas slipstreams (1,000 to 12,000 scfm, or 0.5 to 5 MW) at operating power plants and other large-scale facilities.
By 2020	Complete full-scale demonstration (<25MW) of advanced oxy-combustion and post-combustion CO_2 capture technologies.
ADVANCED INTEGRATED GASIFICATION COMBINED CYCLE (IGCC)	
By 2016	Complete proof-of-concept tests of warm gas cleanup integrated with advanced carbon capture technology at commercially relevant scale.
ADVANCED TURBINES	
By 2012	Develop advanced turbines capable of firing up to 100 percent hydrogen with a thermal efficiency 2-3 percent greater than the technology baseline (turbines at the Wabash River and Tampa Electric IGCC plants).
By 2016	R&D mid-point – Modified existing F-frame machine with a 2,500 °F turbine inlet temperature, and a pressure ratio of 18 with limited increase in power output.
By 2020	H-class H2 Turbine (for 2nd Gen IGCC) with 2,650 °F turbine inlet temperature, pressure ratio of 24, throughput on the order of 4.6 million lb/hr and increased power output for reduced cost.
CARBON SEQUESTRATION	
By 2011	Inject 1.5 million metric tons of CO_2 cumulatively at large-volume field test sites since 2009 to demonstrate the formations capacity to sequester carbon by developing technologies that can safely and economically store carbon dioxide from coal-based energy systems.
By 2015	Develop methodology capable of predicting CO_2 storage capacity in geologic formations to within +/-30 percent of actual storage capacity.
By 2015	Develop pre-combustion technologies to separate, capture, transport, and store CO_2 with less than 10 percent increase in the COE relative to the 2003 technology baseline.
By 2015	Develop MVA technologies to demonstrate that 99 percent of injected CO_2 remains in the injection zones.
By 2018	Complete Best Practice Manuals for site selection, characterization, operational, and closure practices.
FUELS	
By 2013	Complete coal/biomass co-feed pump assessment and testing, and characterization of gasifier products to assess the impact of contaminants on downstream catalysts (WGS and FT) and gas cleanup systems in order to identify the best final product mix and environmental mitigation strategy.
By 2016	Develop hydrogen production and processing technologies (precious and non-precious metal based separation membranes) that will contribute approximately 2.9 percent in improved efficiency and a 12 percent reduction in the cost of electricity to the 40 percent efficient, integrated advanced IGCC near zero emission power production facility.
SECA FUEL CELLS	
By 2016	Complete testing of 250 kWe atmospheric pressure SOFC system, a building block for low cost power generation with 99 percent carbon capture in preparation for deployment in full scale central power generation.
By 2019	Initiate testing of MWe class atmospheric pressure system. Successful completion of this work readies the atmospheric pressure SOFC system for commercial-scale demonstration by 2022.

PROGRAM AREA TARGETS	
Fiscal Year	Targets
ADVANCED RESEARCH	
	Conduct research that helps sustain United States prominence in fossil fuel technology by supporting development of materials, computational methods, and control system knowledge needed to bridge gaps between basic science and engineering development. Efforts will allow development of enabling technologies that support the goals of near-zero atmospheric emissions energy for next generation power systems.
CLEAN COAL POWER INITIATIVE (CCPI)	
By 2015	The Clean Coal Power Initiative will begin to demonstrate commercial-scale carbon capture and storage or beneficial reuse technologies that target to achieve 90 percent capture efficiency for carbon dioxide to enable subsequent commercial deployment in the coal-fired utility industry.

3. CCS RD&D Time Line

As noted above, the costs associated with application of currently available CO_2 capture technologies on coal-based power plants are high. In response to this, the DOE/NETL CCS RD&D effort is developing advanced technologies to capture CO_2 at electricity costs that approach the costs associated with current supercritical PC plants. The effort is focused on CCS applications for both new and existing plants. Figure 1-10 presents an overview of the timelines for technology development based upon current program funding levels. As a result of these efforts, advanced technologies will be ready for full-scale demonstration by 2020. DOE funding to support this RD&D effort totals approximately $2 billion for FY 2011 through FY 2015. It should be noted that the CCS demonstrations shown at the bottom of the figure represent utility-scale demonstrations of currently available technologies.

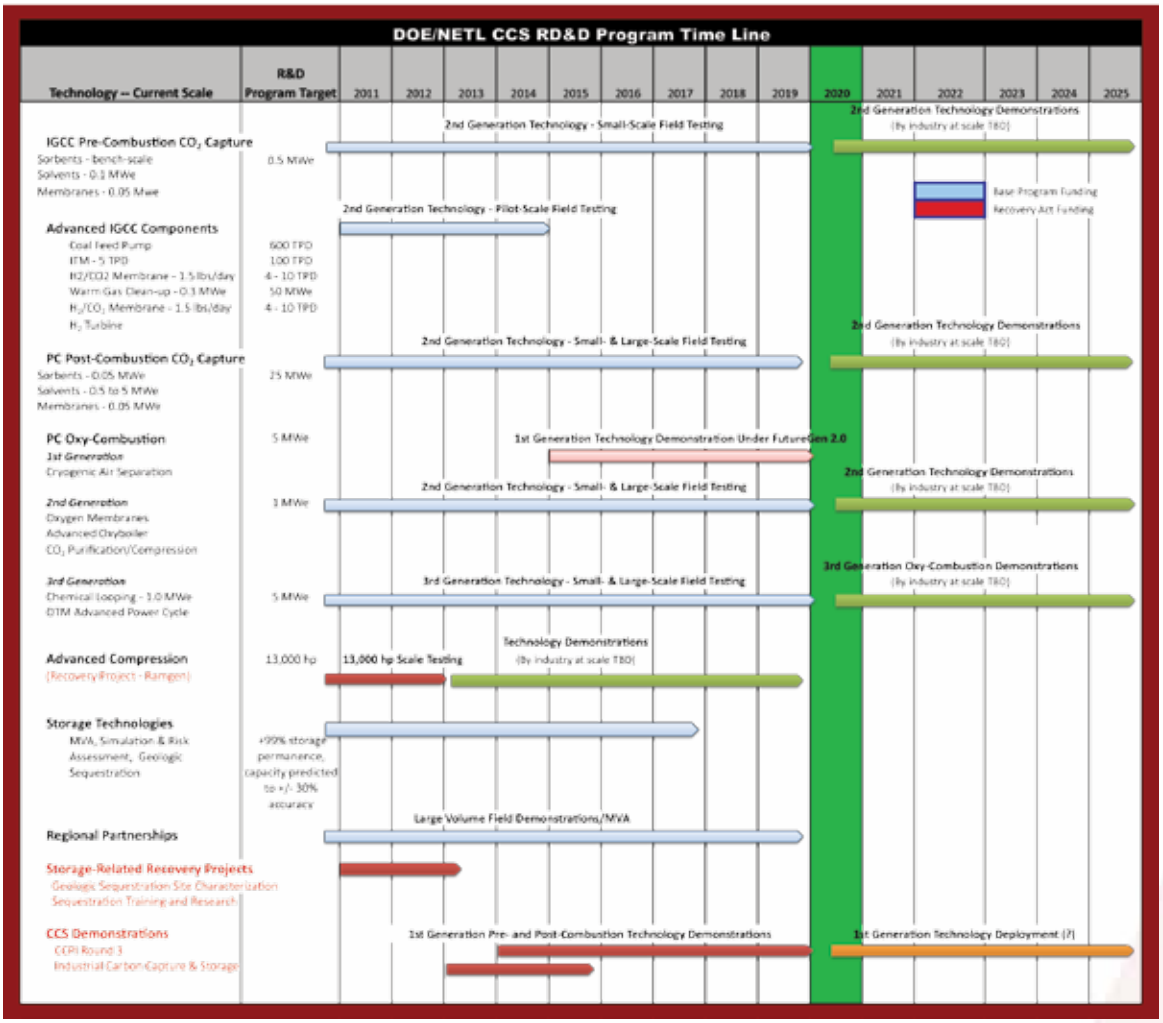

Figure 1-10. CCS RD&D Timeline

The RD&D effort provides three "new plant" technology paths for coal-based power plants with CCS: pre-combustion/advanced IGCC, PC oxy-combustion, and ultra-supercritical PC with advanced post-combustion capture. The components included in each innovative "new plant" technology concept are being readied for large-scale field testing beginning in 2016. The successful testing of these component technologies would allow integrated full-scale demonstrations in coal-based power plants beginning in 2020.

As shown in Figure 1-10, pre-combustion CO_2 capture systems under development in the CS R&D program include sorbents, solvents, and membranes that will be developed and validated up to a 0.5 MWe scale. The Gasification program is developing gasification-based technologies to reduce the cost of IGCC plants, improve thermal efficiency, and achieve near-zero atmospheric emissions of all pollutants, including CO_2. Testing of component technologies (e.g., coal handling, oxygen separation, and H_2/CO_2 membranes) will be completed by 2016 to allow for integrated full-scale demonstrations of advanced pre-combustion capture technologies by 2020.

The key technology components under development for retrofitting the existing fleet include advanced, second generation, post-combustion sorbents, solvents, and membranes for CO_2 capture and advanced CO_2 compression. The effort is focused on developing the post-combustion capture technologies through proof-of-concept to a 25 MWe scale, which readies them for full-scale demonstration beginning in 2020. Advanced compression technology (being developed with Recovery Act funding) should be available for large-scale demonstration by 2013.

First generation oxy-combustion technology should be developed and ready for full-scale demonstration beginning in 2015 (FutureGen 2.0 project at 200 MWe scale), while second generation technology is to be readied for full-scale demonstration beginning in 2020. Likewise, third generation oxy-combustion technologies (chemical looping and oxygen transport membrane [OTM] power cycles) will be field tested over the next decade at small- and large-scale so that full-scale demonstrations can begin by 2020.

In parallel with these CO_2 capture RD&D activities, the DOE-funded RCSPs are researching the most appropriate technologies, suitable sites, appropriate regulations, and necessary infrastructure for CCS implementation in different areas of the country. Site characterization work has been completed at potential storage sites and validation testing of many technologies has also been completed. Large-scale field testing began in 2008 and will continue as part of the RCSP Deployment Phase. This testing, which involves injecting at least 1 million metric tons of CO_2 into geologic formations at each of the large-volume test sites, will confirm during the next decade that large volumes of CO_2 can be injected, permanently stored, and successfully monitored in geologic formations.

CCPI is an innovative technology demonstration program that fosters more efficient clean coal technologies for use in new and existing coal-based power plants. The intent of CCPI is to accelerate technology adoption and thus rapidly move promising new concepts to a point where private-sector decisions on deployment can be made. CCPI is currently conducting three pre-combustion and three post-combustion first generation CO_2 capture demonstration projects (See Table 1-2). The pre-combustion projects involve CO_2 capture from IGCC power plants. The generating capacities at the demonstration facilities range from 257 to 582 MW. The CO_2 capture efficiencies range from 67 percent to 90 percent, and total CO_2 captured ranges from 2 million to 3 million tons per year. The demonstrations will be initiated between 2014 and 2016, and the projects will run for two to three years.

The post-combustion CCPI projects will capture carbon from PC plant slipstreams representing the equivalent of 60 to 235 MW of power production. Each will capture 90 percent of CO_2 emissions with a total capture of 0.4 million to 1.5 million tons per year. In August 2010, DOE/NETL announced the selection of a first generation oxy-combustion technology CO_2 capture demonstration project that is being conducted under the FutureGen 2.0 Initiative that will repower an existing 200-MW power plant located in Illinois.

Table 1-2. CCPI CO_2 Capture Demonstration Projects

Performer	Location	Capture Technology	Capture Rate, Tonnes/yr	Start Date
PRE-COMBUSTION CAPTURE				
Summit Texas Clean Energy	Odessa, TX	Selexol	3,000,000	2014
Southern Company	Kemper County, MS	Selexol	2,000,000	2014
Hydrogen Energy California	Kern County, CA	Rectisol	2,000,000	2016
POST-COMBUSTION CAPTURE				
Basin Electric*	Beulah, ND	Amine	500,000 – 1,000,000	2014
NRG Energy	Thompsons, TX	Amine	500,000	2015
AmericanElectric Power	New Haven, WV	Chilled Ammonia	1,500,000	2015
OXY-COMBUSTION CAPTURE				
FutureGen 2.0**	Meredosia, IL	Oxy-Combustion	1,000,000	2015

* On 12/17/10, Basin Electric announced an indefinite hold on completing the project.
** This project is not a part of the CCPI program, but has a similar scope and objectives.

Table 1-3. Industrial Carbon Capture and Storage Initiative Projects

Performer	Location	Capture Technology	Product	Capture Rate, Tonnes/yr	Start Date
Leucadia Energy	Lake Charles, LA	Rectisol	Methanol	4,000,000	2014
Archer Daniels Midland	Decatur, IL	Amine	Power, Ethanol	900,000	2014
Air Products	Port Arthur, TX	Amine	Hydrogen	900,000	2013

In addition to the demonstrations under CCPI, additional CO_2 capture demonstration projects are being conducted under the ICCS program (See Table 1-3). Several of the ICCS projects are pursuing capture technologies that are similar to those that are being demonstrated for power plants. These projects are of similar magnitude to the CCPI capture demonstrations (90 percent capture, 0.9 million to 4 million tons/year captured).

Collectively, all of these activities are an integral part of the CCS RD&D effort and must successfully progress along parallel paths in order for the ultimate goal of commercial-scale CCS to be realized.

D. American Recovery and Reinvestment Act Impact on CCS RD&D

The scope of DOE's CCS RD&D effort was significantly expanded in 2009 through funding provided under the Recovery Act. DOE's FE received more than $3 billion from the Recovery Act for initiatives that focus on RD&D of technologies to use coal more cleanly and efficiently. Investments are going toward finding and testing new ways to produce energy from coal and improving techniques to capture and store the CO_2 emissions from coal-based power plants. DOE is using the Recovery Act funds to expand and accelerate the commercial deployment of CCS technologies. The funding is a direct investment in CCS-related infrastructure encompassing a diverse portfolio of research and demonstration among electric power and industrial facilities, academic institutions, and other organizations. This funding also stimulates private sector infrastructure investments due to the significant amount of cost sharing that occurs in these projects. These combined public and private investments will establish a proving ground for creating a safe, reliable, widely available, environmentally responsible, and affordable CCS infrastructure. The Recovery Act funding is being used for the following CCS-related activities:

Clean Coal Power Initiative: A total of $800 million is being used to expand DOE's CCPI, which provides government co-financing for new coal technologies that can help utilities cut sulfur, nitrogen, and mercury pollutants from power plants. The new funding will allow researchers broader CCS commercial-scale experience by expanding the range of technologies, applications, fuels, and geologic formations that are tested.

Industrial Carbon Capture and Storage: A total of $1.5 billion is being used for a two-part competitive solicitation for large-scale CCS from industrial sources. The industrial sources include, but are not limited to, cement plants, chemical plants, refineries, steel and aluminum plants, manufacturing facilities, and petroleum coke-fired and other power plants. The second part of the solicitation includes innovative concepts for beneficial CO_2 reuse (CO_2 mineralization, algae production, etc.) and CO_2 capture from the atmosphere. (Note: In September 2010, DOE announced the selection of 24 additional projects that will accelerate CCS R&D for industrial sources. With more than $635 million in Recovery Act funds, these R&D projects complement the industrial demonstration projects already being funded through the Recovery Act.)

Scale-Up of Current Projects: One existing industrial project is being expanded to accelerate scale-up and field testing. Ramgen was funded $20 million to allow the industrial-sized scale-up and testing of an existing project to develop an advanced CO_2 compression process with the objective of reducing time to commercialization, technology risk, and cost.

Geologic Sequestration Site Characterization: A total of $100 million is being used to characterize a minimum of 10 geologic formations throughout the United States. Projects are required to complement and build upon the existing characterization base created by DOE's RCSPs, looking at broadening the range and extent of geologic basins that have been studied to date. The goal of this effort is to accelerate the determination of potential geologic storage sites.

Geologic Sequestration Training and Research: A total of $20 million is being used to educate and train a future generation of geologists, scientists, and engineers with skills and competencies in geology, geophysics, geomechanics, geochemistry, and reservoir engineering disciplines needed to staff a broad national CCS RD&D effort. This program emphasizes advancing educational opportunities across a broad range of minority colleges and universities.

FutureGen 2.0: A total of $1 billion is being used to build FutureGen 2.0, a clean coal repowering program and CO_2 storage network being conducted by the FutureGen Alliance, Ameren Energy Resources, Babcock & Wilcox, and Air Liquide. The project will repower Ameren's 200-MW Unit 4 in Meredosia, Illinois, with advanced oxy-combustion technology. The plant's new boiler, ASU, and CO_2 purification and compression unit will provide 90 percent CO_2 capture and eliminate most SO_x, NO_x, mercury, and particulate emissions. The project includes establishing a regional CO_2 storage site in Southern Illinois and a CO_2 pipeline network that will transport and store more than 1 million tons of captured CO_2 per year. The CO_2 storage site will be used to conduct research on site characterization, injection and storage, and monitoring and measurement.

Carbon Capture and Storage Simulation Initiative: A total of $40 million is being used to accelerate CCS technology development using advanced simulation and modeling techniques. The CCS Simulation Initiative will bring together national laboratories and universities to collaborate on advancing the science and research related to CCS. Using advanced modeling and simulation, researchers will develop science-based methods aimed at lowering the cost of CO_2 capture while reducing risks associated with its storage. The initiative will fund simulation and modeling activities to advance the following areas:

- Development of validation data for simulations that predict key processes and components associated with capture of CO_2 at industrial facilities and with long-term storage of CO_2 in geologic reservoirs.
- Development of advanced simulation tools to speed the path from concept to deployment of new methods for capturing CO_2 at a variety of industrial facilities.
- Development of a defensible, science-based methodology and advanced simulation tools for quantitative assessment of potential risks associated with long-term storage.

The CCS Simulation Initiative builds upon the efforts of DOE's Carbon Capture Simulation Initiative and National Risk Assessment Partnership.

National Risk Assessment Partnership: Recovery Act funding is also being used to support the National Risk Assessment Partnership (NRAP). Under NRAP, DOE is developing the tools and science base for ensuring long-term storage. NRAP is a NETL collaboration with other DOE national laboratories to integrate CCS R&D activities and to develop the science base necessary to quantify potential risks associated with long-term geologic storage of CO_2. In particular, NRAP is developing a defensible, science-based methodology for quantifying risk profiles at storage sites. Such a methodology provides the scientific basis for assessing residual risks associated with long-term stewardship. In addition, NRAP will develop a strategic, risk-based monitoring protocol, such that monitoring at all stages of a project effectively minimizes uncertainty in the predicted behavior of the site, thereby increasing confidence in storage integrity. NRAP activities are led by NETL, but include researchers from Los Alamos National Laboratory (LANL), Lawrence Berkeley National Laboratory (LBNL), Lawrence Livermore National Laboratory (LLNL), and Pacific Northwest National Laboratory (PNNL).

Ensuring the permanence of CO_2 in large-scale storage reservoirs requires accurate prediction of the movement and reactivity of CO_2, while monitoring each site to verify performance. NRAP has evaluated scientific knowledge gaps and identified five focus areas for further research. Those research areas are as follows: reservoir performance and wellbore integrity; natural seal integrity (including geomechanical response of the reservoir/seal); groundwater systems; strategic monitoring for risk assessment; and systems modeling for science-based risk assessment. The RCSP field sites will provide an ideal opportunity for applying and validating the new risk-assessment tools being developed by NRAP.

E. International Collaboration

The critical need for and importance of CCS has been readily accepted by the international community. Table 1-4 shows several substantial CCS projects that are underway in 10 countries outside of the United States, covering the spectrum of post-, oxy-, and pre-combustion processes for enhanced CO_2 capture at various types of facilities.

Technology transfer is an integral part of U.S. efforts to reduce GHG emission levels on a global scale. In 2003, CSLF—an international carbon sequestration organization comprised of 25 members, including 24 countries and the European Commission—was formed to act as an international forum for CO_2 sequestration technology transfer. Joint efforts by DOE and the U.S. Department of State established CSLF to facilitate the development of improved cost-effective technologies related to carbon capture, transportation, and long-term storage; to promote the implementation of these technologies internationally; and to determine the most appropriate political and regulatory framework needed to promote CCS on a global scale. Intellectual, technical, and financial resources foster the efforts of CSLF's international partnership with private industry to support goals for stabilization of atmospheric CO_2 concentrations. This is coupled with the promotion of appropriate regulatory policy. More information on CSLF and its activities can be found at http://www.cslforum.org.

DOE also collaborates with other multilateral organizations, such as the International Energy Agency (IEA), on climate change policy. The United States was a founding member of IEA, whose mandate is to foster energy security, economic development, and environmental protection. The IEA Greenhouse Gas R&D Programme, an international collaborative research program set up under the auspices of IEA, has validated the RCSPs' large-scale tests as the world's most "ambitious" program for the advancement of CCS projects. Their expert reviewers have endorsed the RCSP efforts as a successful approach to advance CCS. Additionally, DOE is involved with the International Panel on Climate Change (IPCC) through the review of IPCC reports. Information on IEA can be found at http://www.iea.org.

To advance CCS research, DOE is partnering with many organizations in the international arena. For example, DOE is collaborating with Australia's Cooperative Research Centre for Greenhouse Gas Technologies (CO_2CRC) on the Otway Basin Project, where research is being conducted in a depleted gas field in southeastern Australia to demonstrate the feasibility of storing CO_2. DOE's involvement with the Weyburn-Midale Project is helping to assess the technical and economic feasibility of geological storage of CO_2 in oil reservoirs and develop implementation guidelines for such projects. Efforts on this project will determine the long-term storage risks and monitoring requirements associated with geologic integrity, wellbore integrity, storage monitoring methods, risk assessment and storage mechanisms, and data validation and management. In Algeria, DOE is collaborating on the In Salah Project, where researchers are developing the tools, technologies, techniques, and management systems required to cost-effectively demonstrate safe, secure, and verifiable CO_2 storage in conjunction with commercial natural gas production. The Energy & Environmental Research Center (EERC), through the Plains CO_2 Reduction (PCOR) Partnership

(one of seven RCSPs), is working with Apache Canada Ltd. and the Alberta Geological Survey on the Zama Acid Gas EOR, CO_2 Sequestration, and Monitoring Project to determine the affect of acid gas injection for the simultaneous purpose of disposal, sequestration of CO_2, and EOR. DOE shares involvement in the CO_2SINK Project and is evaluating CCS technology at an existing natural gas storage facility and saline formation in Ketzin, Germany. A key element of the project will be monitoring the migration characteristics of the stored CO_2. The goal of the project is to advance understanding of the science and practical

Table 1-4. Examples of CO_2 Capture Projects Located Outside of the United States

Country	Project	CCS Objective
AUSTRALIA		
	Kwinana Hydrogen Project	Operation expected in 2014; ultimate capture and storage of 4 million tonnes/yr of CO_2
	ZeroGen Mark II	Coal gasification and power production with CCS; 80 MW by 2012; 300 MW by 2017
	HRL IDGCC	Integrated Drying Gasification Combined Cycle; 10 MW pilot plant followed by 100 MW plant
BRAZIL		
	Prosint Methanol Production Plant	Methanol production from natural gas; 90 tonnes/day capture of food-grade CO_2 since 1997
CANADA		
	CANMET Energy Technology Centre	Capture-ready, pilot-scale oxyfuel plant
CHINA		
	GreenGen	Under construction; 250 MW IGCC in 2009; 400 MW and 25% of CO_2 captured by 2015
FRANCE		
	Lacq Oxyfuel Plant	Oxyfuel capture and injection into the depleted Rousse gas field in 2009-2010
GERMANY		
	Vatten Schwarze Pump	Oxyfuel capture and storage with demo by 2012-2015; full-scale by 2015-2020
	RWE IGCC	Capture and storage of 2.6 million tonnes/yr of CO_2; operation in 2014
INDIA		
	Indo Gulf Plant	Capture of 150 tonnes/day of CO_2 from Indo Gulf Corporation's ammonia production plant to manufacture urea
ITALY		
	Enel CCS1	Retrofit that will capture 54 tonnes/day; demo plant to be built by 2012 to capture 1 million tonnes/yr
	Enel CCS2	Zero emission oxy-combustion pilot plant to be built by 2012
JAPAN		
	Kurosaki Chemical Plant	283 tonnes/day carbon capture
	Nanko Natural Gas Pilot Plant	Carbon capture unit is used to test new solvents
	Sumitomo Chemicals Plant	160 tonnes/day capture of food-grade CO_2
UNITED KINGDOM		
	Hatfield Colliery	900 MW IGCC plant with pre-combustion capture
	Teesside Plant	800 MW IGCC plant with pre-combustion capture
	Killingholme Plant	450 MW coal-fueled plant with post-combustion capture
	Supercritical Plants	Five plants with post-combustion capture of at least 3.7 million tones/yr; operations to start 2012-2014

processes involved in underground storage of CO_2 and to provide real case experience for use in development of future regulatory frameworks for geological storage of CO_2. DOE is also collaborating on the Sleipner Project at Statoil's Sleipner field in the Norwegian North Sea. There, DOE is providing rigorous monitoring of the injected CO_2 and studying CO_2 behavior to a greater extent than the project operators would have pursued on their own – creating a mutually beneficial public/private partnership.

In 2009, DOE initiated a collaborative effort with China to develop the U.S.-China Clean Energy Research Center (CERC) to facilitate joint research and development of clean energy technologies. CERC will help accelerate the development and deployment of clean vehicle and clean coal technologies and will create new export opportunities for American companies, ensure the United States remains at the forefront of technology innovation, and help to reduce global carbon pollution.

F. Interagency Coordination

A supporting mechanism that further contributes to the success of the CCS RD&D effort is DOE/NETL's collaboration with other government agencies. For example, NETL has been collaborating with DOE's Advanced Research Projects Agency-Energy (ARPA-E) that provides basic research on CO_2 capture technology under its Innovative Materials & Processes for Advanced Carbon Capture Technologies (IMPACCT) Program. ARPA-E was organized in 2007 as the energy equivalent to the Department of Defense's Defense Advanced Research Projects Agency (DARPA). One of ARPA-E's objectives is to advance creative "out-of-the-box" transformational energy research that industry by itself cannot or will not support due to its high risk, but where success would provide dramatic benefits for the Nation. ARPA-E complements existing DOE/NETL efforts by accelerating promising ideas from the basic research stage.

DOE has also been working actively with the U.S. Environmental Protection Agency (EPA) to establish mutual guidance for CCS projects. The agencies are coordinating efforts to evaluate potential impacts of the underground injection of CO_2 on public health, safety, and the environment, while EPA is establishing guidelines to ensure that there is a consistent and effective permit system for commercial-scale geologic storage projects. Additionally, DOE has met regularly with various state and local governments and EPA to discuss regulatory issues for the implementation of the RCSP Validation and Development Phase projects. DOE and EPA participate in an interagency working group that involves interaction between DOE, the EPA Office of Air and Radiation, and the EPA Office of Water. DOE has provided technical expertise to EPA in the regulatory development process for the Underground Injection Control (UIC) Program, which is responsible for regulating the construction, operation, permitting, and closure of injection wells for the purpose of underground CO_2 storage. DOE and EPA have also co-sponsored workshops, conferences, and review meetings to explore the technical aspects and regulatory considerations of geologic sequestration and to share ideas with stakeholders and experts. DOE/NETL and EPA also co-chaired the Interagency Task Force on Carbon Capture and Storage that issued its final report in August 2010 that proposed a plan to overcome the barriers to the widespread, cost-effective deployment of CCS.

In the areas of geologic and indirect sink sequestration projects, DOE has cooperated with the U.S. Departments of Agriculture (U.S. Forest Service) and Interior (Office of Surface Mining and Bureau of Land Management). The U.S. Geological Survey (USGS) provides databases which are integrated into regional assessments for the RCSPs, and many USGS regional offices are participating in CCS projects throughout the country. Additionally, USGS has provided limited collaboration on capacity assessments throughout the United States.

THIS PAGE INTENTIONALLY LEFT BLANK

CHAPTER 2: CO_2 CAPTURE AND COMPRESSION

A. Introduction

Based on current and proposed Federal legislative and regulatory initiatives, it seems likely that U.S. coal-based power plants will eventually be required to implement CCS technologies to control their CO_2 emissions. There are commercially-available CO_2 capture technologies that are being used in various industrial applications. However, at their current state of development these technologies are not ready for widespread deployment on coal-based power plants. The three primary reasons for this are: (1) they have not been demonstrated at a large enough scale necessary for power plant application; (2) the parasitic loads (steam and power) required to support CO_2 capture would significantly decrease power generating capacity; and (3) if successfully scaled-up, they would not be cost effective at their current level of process development. For example, DOE/NETL estimates that the deployment of current state-of-the-art, post-combustion CO_2 capture technology—chemical absorption with an aqueous monoethanolamine (MEA) solution—on a new pulverized-coal power plant would increase cost of energy (COE) by approximately 80 percent and de-rate the plant's net generating capacity by as much as 30 percent due to the steam and auxiliary power required to operate the CCS system. Therefore, DOE/NETL believes it is important to develop new advanced CO_2 capture technologies in order to maintain the cost-effectiveness of U.S. coal-based power generation. Near-term efforts focus on two parallel RD&D paths. The first path is to demonstrate (i.e., learn-by-doing) that the scale-up of first generation CO_2 capture technologies is achievable so that commercial deployment can begin by 2020. This effort is currently underway through the CCPI and ICCS demonstrations. The second path is to continue development of advanced second and third generation CO_2 capture technologies that can significantly decrease the parasitic loads and improve the cost-effectiveness of CCS and be ready for full-scale demonstration by 2020 and enable commercial deployment by 2030. This effort is currently underway through the various NETL RD&D program areas.

The success of this research will enable cost-effective implementation of CCS technologies throughout the power generation sector and ensure the United States will continue to have access to safe, reliable, and affordable energy from fossil fuels. The overall goal of NETL's CO_2 capture RD&D effort is to develop fossil fuel conversion systems that achieve 90 percent CO_2 capture at a less than 10 percent increase in the COE for pre-combustion capture at IGCC power plants and a less than 35 percent increase in COE for post- and oxy-combustion capture at new and existing conventional coal-fired power plants. Given the significant economic penalties associated with currently available CO_2 capture technologies, step-change improvements in both cost and energy efficiency will be required to achieve this goal.

Although efforts are focused on capturing CO_2 from the flue gas or syngas of coal-based power plants, the same capture technologies are applicable to natural gas and oil-fired power plants and other industrial CO_2 sources. A key concern is that the majority of the technology options being considered are still in the laboratory- and bench-scale stage of development. However, it is anticipated that successful progression from laboratory- to full-scale demonstration will result in several of these technologies being available for commercial deployment by 2030 in response to CO_2 emission control requirements.

B. General Approaches for CO_2 Capture

As mentioned previously, DOE/NETL is investigating a broad portfolio of research pathways in three general technology approaches for CO_2 capture—pre-, post-, and oxy-combustion. Pre-combustion systems are designed to separate CO_2 from H_2 and other constituents in the syngas produced at IGCC power plants. Post-combustion systems are designed to separate CO_2 from the flue gas—primarily N_2—produced by fossil fuel combustion in air. Oxy-combustion utilizes high-purity O_2, rather than air, to combust coal and therefore produces a highly concentrated CO_2 stream. The following is a brief description of these three approaches.

1. Pre-Combustion Capture

Pre-combustion capture is mainly applicable to IGCC power plants and refers to removal of the CO_2 from the syngas prior to its combustion for power production. A simplified process schematic for pre-combustion CO_2 capture is shown in Figure 2-1.

In the gasifier, fuel is converted into gaseous components by applying heat under pressure in the presence of steam and limited O_2. By carefully controlling the amount of O_2, only a portion of the fuel burns to provide the heat necessary to decompose the fuel and produce syngas, a mixture of H_2 and CO, along with minor amounts of other gaseous constituents. To enable pre-combustion capture, the syngas is further processed in a WGS reactor, which converts CO into CO_2 while producing additional H_2, thus increasing the CO_2 and H_2 concentrations. An acid gas removal system, such as Selexol™ , can then be used to separate the CO_2 from the H_2. After CO_2 removal, the H_2 is used as a fuel in a combustion turbine combined cycle to generate electricity. Another application, currently being developed under DOE's Fuel Cell Program, is to utilize the H_2 to power solid oxide fuel cells (SOFCs) to significantly increase the overall plant efficiency.

The current state-of-the-art pre-combustion CO_2 capture technologies that could be applied to IGCC systems—the glycol-based Selexol™ process and the methanol-based Rectisol® process—employ physical solvents that preferentially absorb CO_2 from the syngas mixture. There are several Selexol™ and Rectisol® systems in use at commercial scale, although not at IGCC power plants. For example, the Rectisol® system is used for CO_2

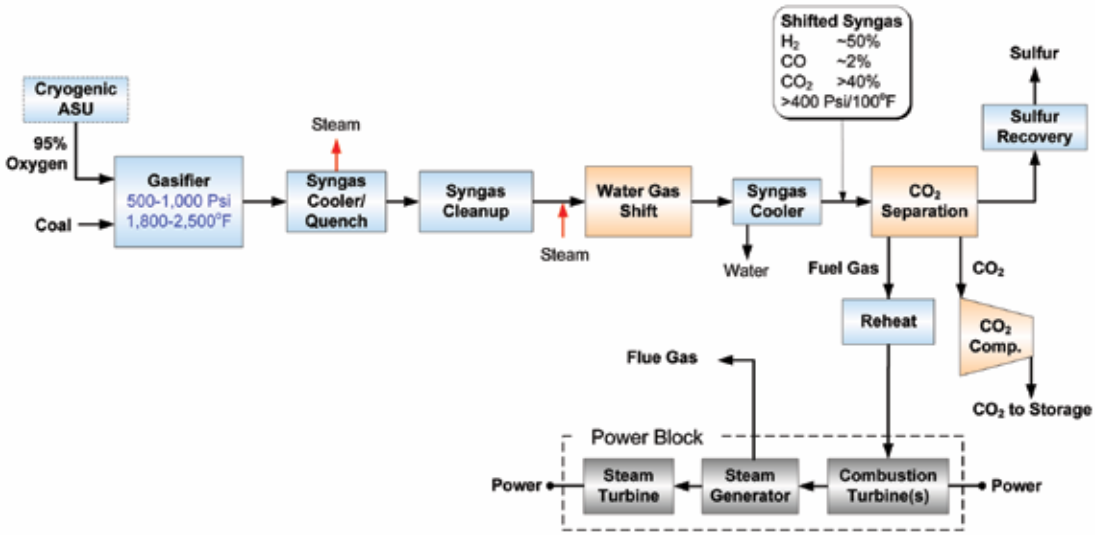

Figure 2-1. Process Schematic of Pre-Combustion Capture

capture at the Dakota Gasification Company's substitute natural gas (SNG) plant located in North Dakota, which is designed to remove approximately 1.5 million tons of CO_2 per year from the syngas. The CO_2 is purified and sent via a 320-km pipeline and injected into the Weyburn oilfield in Saskatchewan, Canada. Figure 2-2 shows a simplified example diagram of a two-stage Selexol™ process configured for an IGCC application.

The first-stage Selexol™ process is used for hydrogen sulfide (H_2S) capture, and the second stage for CO_2 capture. Untreated syngas enters the first of two absorbers where H_2S is preferentially removed using CO_2-rich solvent from the CO_2 absorber. The gas exiting the H_2S absorber passes through the second absorber where CO_2 is removed using both semi-lean and lean solvent streams. The treated syngas exits the absorber and is sent to a combined cycle gas turbine. The CO_2-rich solvent exits the CO_2 absorber and a portion is sent to the H_2S absorber while the remainder is sent to a series of flash drums for regeneration. The CO_2 product stream is obtained from the flash drums and the semi-lean solvent is returned to the CO_2 absorber. Since the CO_2 is flash generated at progressively higher pressure levels (e.g., between 22 psia and 300 psia in the DOE systems analysis study), the total compression energy requirement is lower than it is for post-combustion processes that typically produce a CO_2 product stream near atmospheric pressure. The H_2S/CO_2-rich solvent exiting the H_2S absorber is sent to the acid gas stripper where the absorbed gases are released using a steam heated reboiler. The acid gas from the stripper is sent to a Claus plant for further processing and the lean solvent exiting the stripper is returned to the top of the CO_2 absorber.

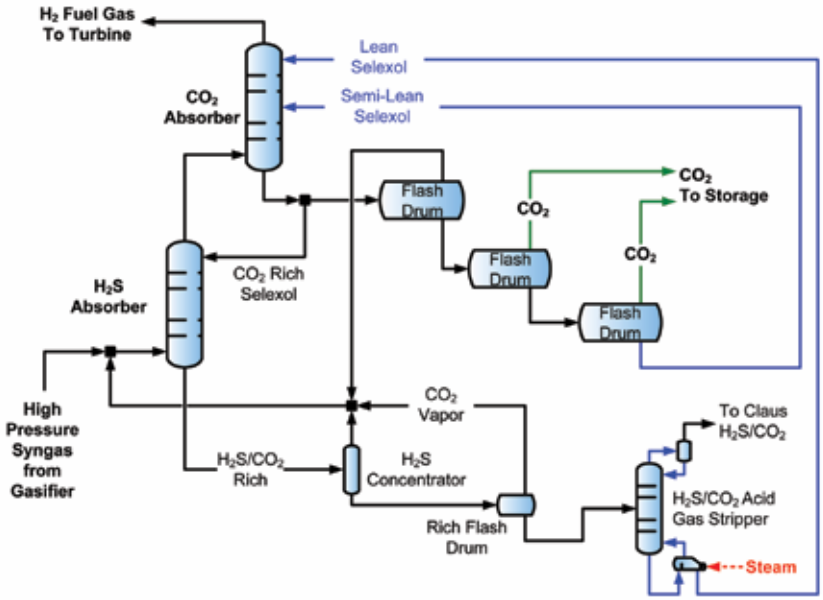

Figure 2-2. Schematic Diagram of Selexol Process for Pre-Combustion CO_2 Capture

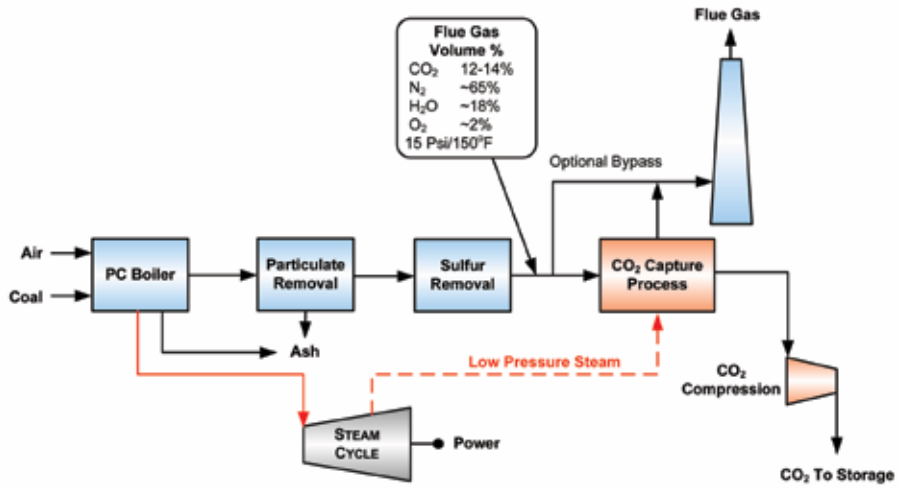

Figure 2-3. Process Schematic of Post-Combustion Capture

2. Post-Combustion Capture

Post-combustion CO_2 capture refers to removal of CO_2 from the flue gas produced from fossil fuel combustion. It is primarily applicable to conventional coal-fired, oil-fired or gas-fired power plants, but could also be applicable to IGCC and natural gas combined cycle (NGCC) flue gas capture. A simplified process schematic of post-combustion CO_2 capture is shown in Figure 2-3.

In a coal-fired power plant, fuel is burned with air in a boiler to produce steam that drives a turbine/generator to produce electricity. Flue gas from the boiler consists mostly of N_2 and CO_2. The CO_2 capture process would be located downstream of the conventional pollutant controls. It's likely that first generation chemical-based wet scrubbing CO_2 capture technologies currently used in industrial applications will initially be used for power plant applications in response to CO_2 emission regulation. The amine-based chemical solvent process requires the extraction of a relatively large volume of low-pressure steam from the power plant's steam cycle, which decreases the gross electrical generation of the plant. The steam is required for release of the captured CO_2 and regeneration of the solvent. Separating CO_2 from this flue gas is challenging for several reasons: a high volume of gas must be treated (~2 million cubic feet per minute for a 550-MWe plant); the CO_2 is dilute (between 12 and 14 percent CO_2); the flue gas is at atmospheric pressure; trace impurities (PM, SO_2, NO_x, etc.) can degrade chemical scrubbing agents; and compressing captured CO_2 from near atmospheric pressure to pipeline pressure (about 2,200 psia) requires a large auxiliary power load.

The current state-of-the-art post-combustion CO_2 capture technologies that could be applied to PC-fired power plants employ chemical solvents that preferentially absorb CO_2 from the flue gas and are capable of achieving 90 percent or more CO_2 capture. Amine-based chemical solvents, such as aqueous MEA, have been utilized for more than 60 years for removal of acid gases (CO_2 and H_2S) from natural gas streams and to produce food-grade CO_2 for use in beverages and other products. However, amine-based chemical solvents have not been demonstrated at a large-scale adequate for coal-fired power plants. Figure 2-4 shows a schematic diagram of the MEA process, which is similar in operation to the pre-combustion Selexol™ process discussed previously. After conventional air pollutant clean-up, the combustion flue gas enters an absorber reactor and flows countercurrently to a CO_2-lean MEA solution where CO_2 is absorbed into, and reacts with, MEA to form water-soluble compounds (such as carbamates). Despite the low CO_2 partial pressure in combustion flue gas, amines are capable of achieving high levels of CO_2 capture due to strong chemical reactions. The treated flue gas is discharged to the atmosphere and the CO_2-rich solution is pumped to a stripper reactor for regeneration. In the stripper, the CO_2-rich solution is heated in order to breakdown the carbamate and regenerate the MEA solvent. A reboiler, supplied with extraction steam from the turbine cycle, provides the heat for regeneration of the MEA solvent in the stripper. Consequently, CO_2 is released, producing a concentrated stream which exits the stripper and is then cooled and dehumidified in preparation for compression, transport, and storage. From the stripper, the CO_2-lean solution is cooled and returned to the absorber for reuse. Not every amine system is the same, and various vendors offer different designs. In general, depending on the amount of heat integration, anywhere from 1,550 to greater than 3,000 British thermal units (Btu) per pound of CO_2 in the form of low-pressure steam (approximately 45 psia) is required to regenerate the solvent to produce a concentrated CO_2 stream at a pressure of approximately 25 psia.

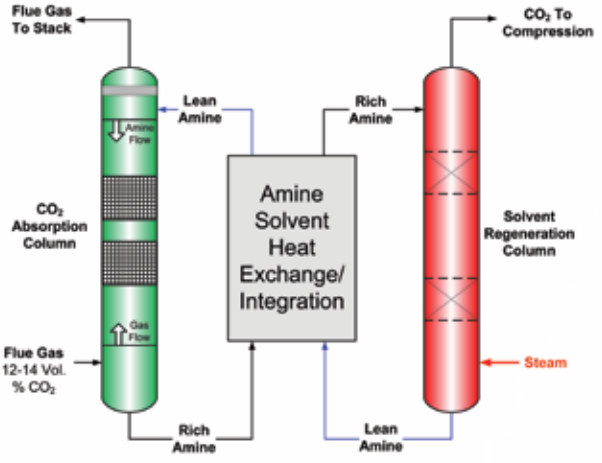

Figure 2-4. Schematic Diagram of MEA Process for Post-Combustion CO_2 Capture

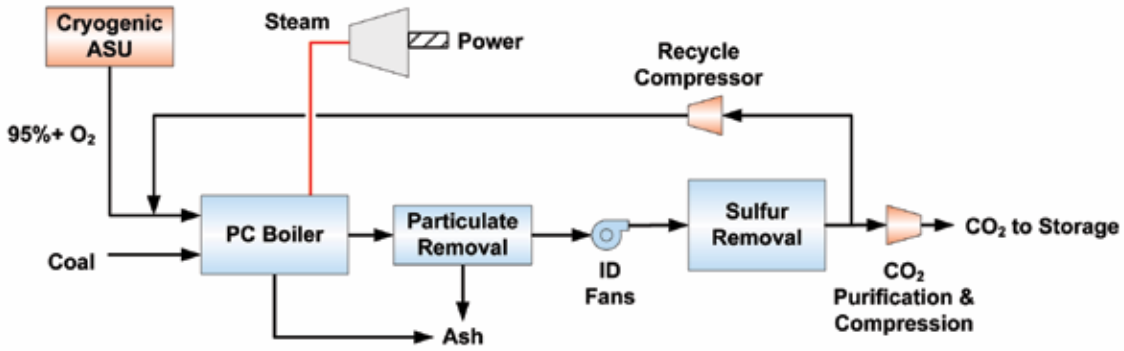

Figure 2-5. Process Schematic of Oxy-Combustion Capture

3. Oxy-Combustion Capture

Oxy-combustion is an alternative to post-combustion CO_2 capture for new and existing conventional PC-fired power plants that offers the potential for near 100 percent CO_2 capture. A simplified process schematic of oxy-combustion CO_2 capture is shown in Figure 2-5. The objective of oxy-combustion is to combust coal in an enriched O_2 environment by using pure O_2 diluted with recycled CO_2 or H_2O. Flue gas recycle (~70 to 80 percent of the gas stream) is necessary to approximate the boiler combustion and heat transfer characteristics of combustion with air. The main products of combustion are CO_2 and H_2O, so all that is required for CO_2 capture is condensing H_2O from the exhaust stream—a separate chemical process isn't necessary. One possible process performance concern related to oxy-combustion is excessive air infiltration via leakage into the boiler that dilutes the flue gas with N_2. Particulate matter is removed using a conventional fabric filter or electrostatic precipitator. Depending on transportation and sequestration requirements, other minor products of combustion (e.g., excess O_2, SO_2, and NO_x) could also require removal to produce a relatively pure CO_2 stream. If so, this purification step should have significantly less cost than a conventional post-combustion capture system due to the reduced flue gas volume. However, there is some discussion that indicates co-sequestration of CO_2 with the other minor gaseous products of combustion could be technically acceptable. The experience with EOR has demonstrated successful H_2S/CO_2 injection and the question of how a combination of $SO_2/NO_x/CO_2$ affects compression, transport, and sequestration has been investigated to some extent in a study completed by the IEA Greenhouse Gas R&D Program.[4, 5]

Applicable to any boiler design, oxy-combustion process control during start-up, shutdown, and load following should be similar to a conventional power plant. Oxy-combustion relies on conventional equipment that is already available at the scale necessary for power plant applications, and key process principles, such as air separation and flue gas recycle, have been proven in the past.

The appeal of oxy-combustion is tempered by the relatively high capital cost and energy consumption for the cryogenic ASU and the lack of large-scale experience with the technology. Further improvements to the cryogenic ASU process and/or development of more cost-effective oxygen production technologies are necessary. To date, partially integrated oxy-combustion systems have only been demonstrated at 10 MWe or less (e.g., Vattenfall and B&W). Scale up to a full-size integrated demonstration plant is required to reduce the risk necessary for industry adoption.

C. Cost and Performance Issues of Currently Available Capture Technologies

As mentioned above, currently available industrial-scale CO_2 capture technologies are characterized by cost and performance issues that could significantly limit their cost-effectiveness in power generation applications. These issues serve as the drivers for DOE/NETL's CO_2 capture technology RD&D effort. The following is a more detailed discussion of some of these issues.

1. Cost-Effectiveness

Currently available CCS technologies are expensive and very energy-intensive due to the large quantity of energy required to capture, compress, transport, and store CO_2 into geologic formations. However, there are significant costs and energy penalties associated with the application of those technologies in their current state of development. DOE/NETL analyses indicate that for a nominal 550-MWe net output power plant, the addition of CO_2 capture technology increases the capital cost of a new IGCC facility by $400 million and results in an energy penalty of 20 percent. For post- and oxy-combustion capture, the increases in capital costs are $900 million and $700 million respectively, and the energy penalty would be 30 and 25 percent. For an NGCC plant, the capital cost would increase by $340 million and an energy penalty of 15 percent would result from the inclusion of CO_2 capture. The costs associated with CO_2 capture in terms of increases in the levelized cost of energy (LCOE) or cost per tonne of CO_2 avoided are shown in Figure 2-6. The LCOE ranges from $116/MWh to $151/MWh, depending upon the type of facility and whether the application is for a new plant or a retrofit of an existing plant. This compares to an LCOE of $85/MWh for a new supercritical PC plant and a $27/MWh LCOE for the existing fleet of power plants. In terms of costs per tonne of CO_2 avoided, values range from $60/tonne to $114/tonne.

Improvements to currently available CO_2 capture and compression processes, as well as the development of advanced capture technologies, are important in reducing the costs incurred for CO_2 capture. However, the majority of advanced CO_2 capture technology options being considered are still in the laboratory- and bench-scale stage of development. Therefore, it will likely be several years before they are ready for full-scale demonstration.

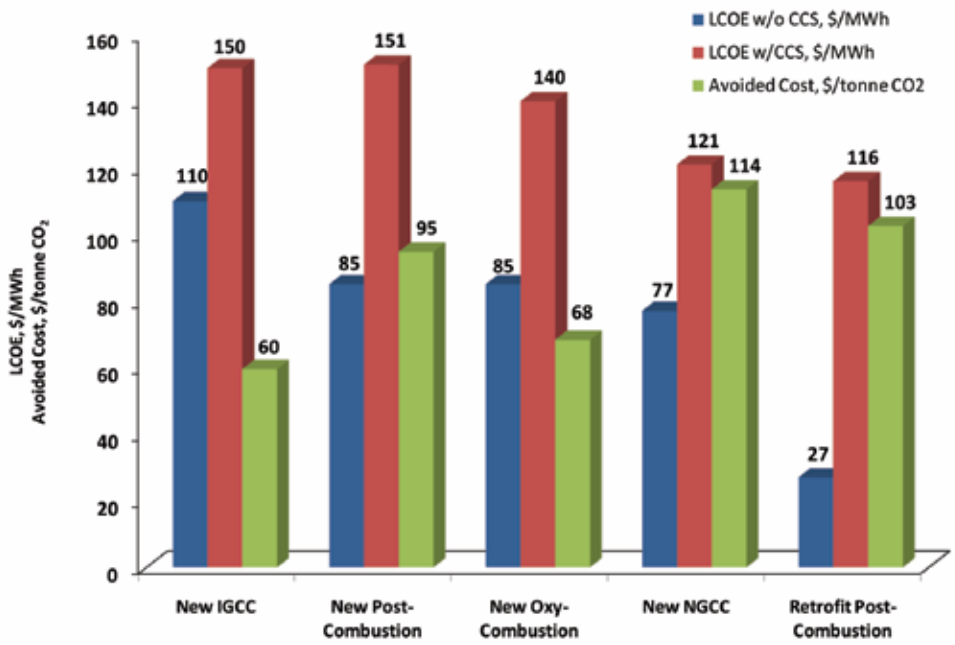

Figure 2-6. Comparison of Cost Metrics for Different Types and Configurations of Power Plants Equipped with CCS

2. Capture and Compression Parasitic Power

The net electrical output from a coal-based power plant employing currently available CO_2 capture and compression technologies will be significantly less than that for the same plant without capture. This is because some of the energy—thermal and electrical—produced at the plant must be used to operate the CO_2 capture and compression processes. Figure 2-7 shows the change in net plant efficiency as a result of implementing currently available CO_2 capture and compression technologies on conventional PC, IGGC, and NGCC power plants.

Another ramification for retrofitting an existing plant with CCS is that the lost power output must be replaced. Therefore, new power generation capacity of some kind will need to be added while CCS technologies are being implemented. Replacing lost electricity generating capacity could also result in an increased use of limited natural resources. For example, if the make-up power comes from the addition of new coal-fired power plants, both coal and water utilization will increase. In addition, it is possible that overall air, water, and solid waste emissions will also increase. The use of additional natural resources will occur even if the replacement power comes from natural gas, biomass, nuclear, or other power generation sources.

The reduced electrical output for power plants employing CCS results from the significant amount of steam and auxiliary power required to operate the CO_2 capture system. CCS steam usage decreases the gross electrical generation, while the additional auxiliary power usage decreases the net electrical generation of the power plant. DOE/NETL conducted a study to determine the cost and performance of a post-combustion CO_2 capture technology retrofit on American Electric Power's (AEP) coal-fired Conesville Unit No.5.[6] The amine-based CO_2 capture process would require extraction of approximately 50 percent of the steam that normally flows through the low-pressure turbine for a 90 percent CO_2 capture scenario.

As a result of the CO_2 capture system's steam energy requirements, the gross power output of the unit would decrease by ap-

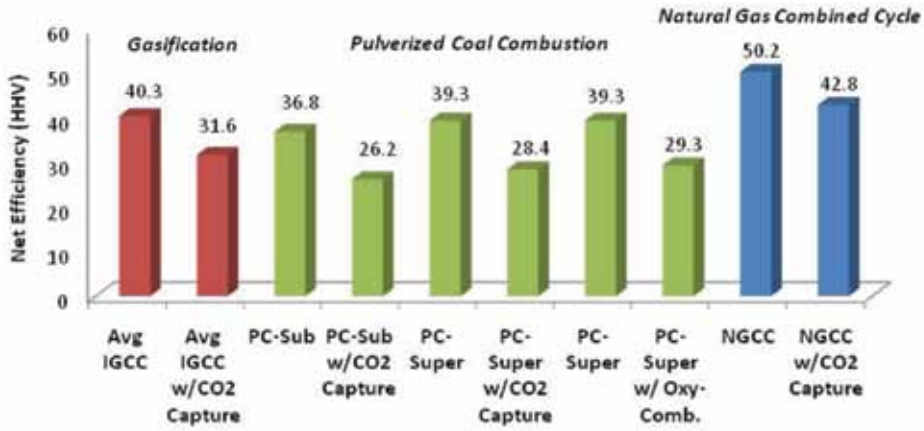

Figure 2-7. Net Plant Efficiency with and without CO_2 Capture and Compression

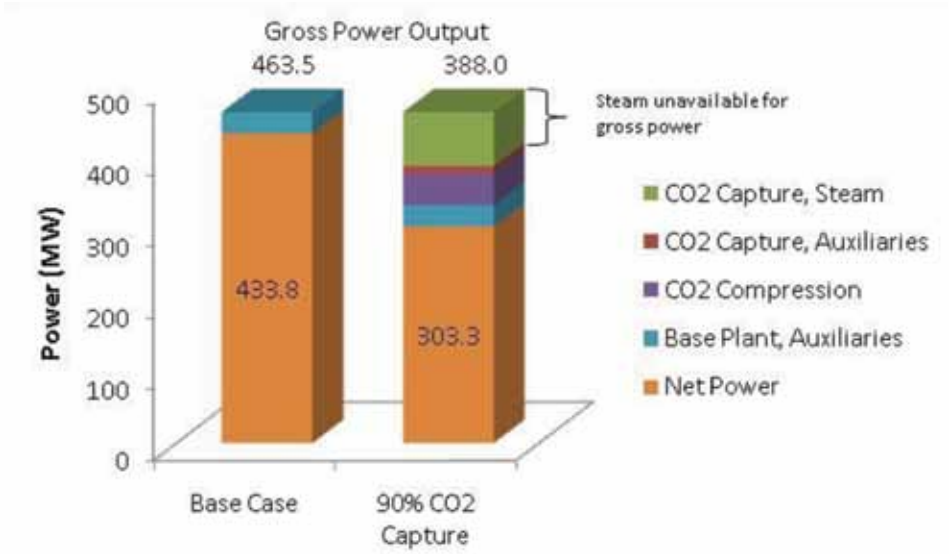

Figure 2-8. Potential Effect of CO_2 Capture and Compression Parasitic Power on Net Power Output for the AEP Conesville Power Station Unit No. 5

proximately 16 percent (from 463.5 MWe to 388.0 MWe). Meanwhile, the auxiliary power requirements for the CO_2 capture and compression system totaled 55 MWe. The combined effect of steam and auxiliary power required to operate the CO_2 capture and compression system is that the net power output of the unit would decrease by approximately 30 percent (from 433.8 MWe to 303.3 MWe). Figure 2-8 presents a summary of the potential effect of CO_2 capture and compression parasitic power on gross and net power output.

3. Integration with Existing Plant Infrastructure

As discussed above, the energy required to regenerate the solvent in currently available CO_2 capture technologies would be provided by steam extraction from the power plant, which requires careful integration of the power plant steam cycle to the CO_2 capture technology. A high level of integration is necessary to optimize both power generation and CO_2 separation efficiencies and will be necessary under all operating conditions including start-up, shut down, and load cycling. Figure 2-9 shows an example of steam cycle integration through the use of a let-down turbine and generator to extract additional electrical energy from the steam prior to its use for solvent regeneration.

4. Cooling Water Requirements

The process of CO_2 capture and compression requires a relatively large quantity of cooling water. In recent DOE/NETL studies, subcritical PC, supercritical PC, and IGCC power plant configurations were evaluated for the impact of CO_2 capture and compression on water withdrawal and consumption requirements. The two commonly used metrics to measure water use are withdrawal and consumption. Water consumption is used to describe the loss of withdrawn water, typically through evaporation into the air, which is not returned to the source. The evaluation results in terms of water use in gallons per megawatt-hour (gal/MWh) are presented in Figure 2-10 for various power plant configurations equipped with wet recirculation cooling systems.[7] In-

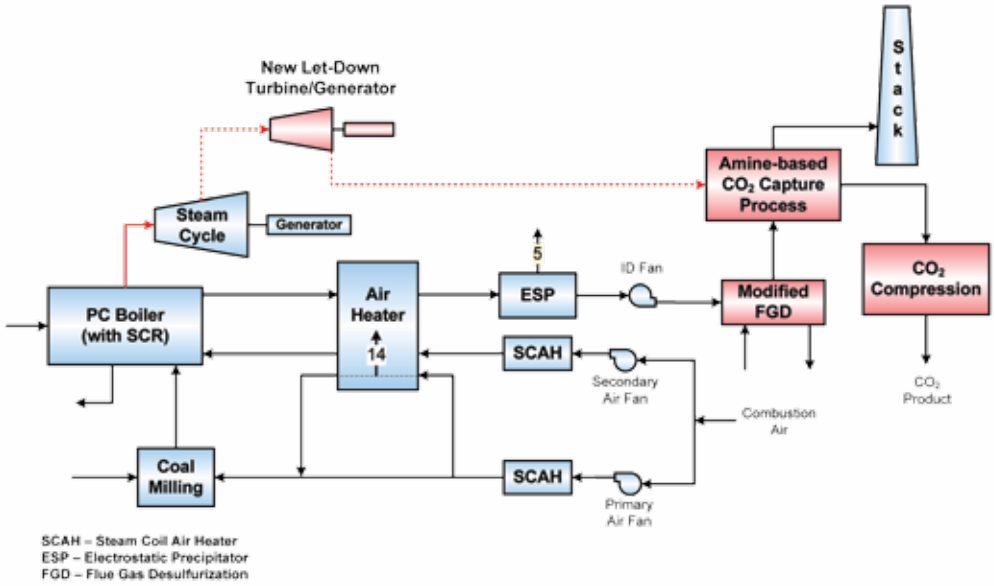

Figure 2-9. Use of Let-Down Turbine for Integration of CO_2 Capture with Steam Cycle

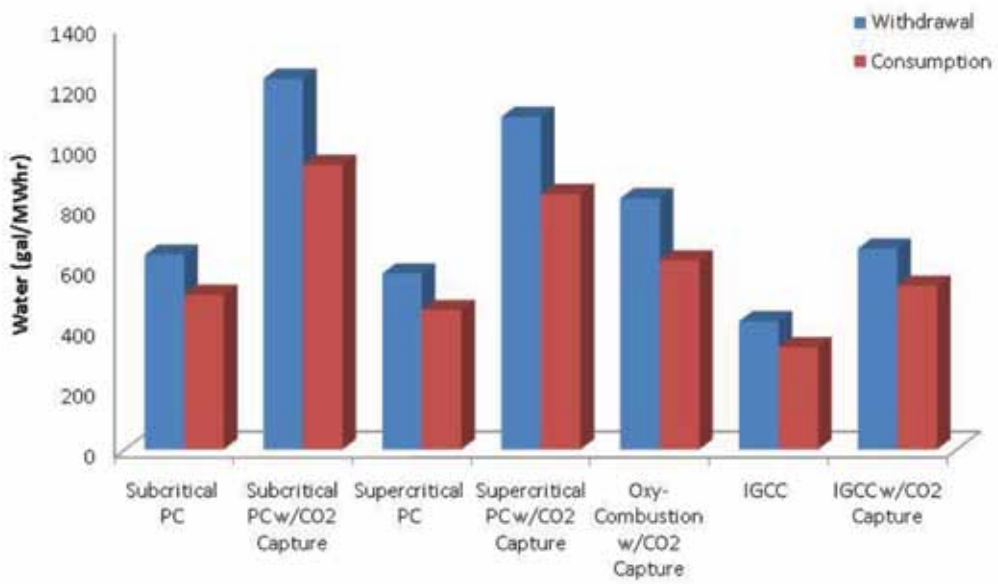

Figure 2-10. Potential Effect of CO_2 Capture and Compression on Relative Water Usage for New PC and IGCC Plants

stalling CCS equipment increases the water requirement per net power generation of a plant, both due to a reduction in the plant efficiency and to the cooling water and process water requirements associated with CO_2 capture and compression.

A post-combustion chemical solvent-based CO_2 capture and compression process involves a number of subsystems which collectively require a significant amount of cooling water. This includes flue gas cooling, water wash cooling, absorber intercooling, reflux condenser cooling, solvent reclaimer cooling, lean solvent cooling, and CO_2 compressor interstage cooling. At the same time, however, the cooling water requirements associated with the steam turbine condenser are reduced slightly due to the steam extraction for solvent regeneration. In addition, a portion of the cooling water that is lost to evaporation is offset by recovering water that condenses as the CO_2 is cooled and compressed. In a plant without CO_2 capture, this water would generally exit the stack as water vapor. For IGCC plants, the CO_2 capture system components that require water for process or cooling include the ASU, the WGS reactor, the physical solvent-based absorber/regenerator system, and the CO_2 compressor. For oxy-combustion, the CO_2 capture system components that require water for process or cooling include the ASU and the CO_2 compressor.

5. CO_2 Capture Impacts on Existing Plant Retrofits

As discussed in Chapter 1, EIA estimates that almost 95 percent of the coal-based CO_2 emissions projected to be released from today through 2030 will originate from existing coal-based power plants. Therefore, retrofits of CCS will likely be required on a large portion of existing coal-based power plants. While implementation of CCS to new plants will be challenging, its application to existing plants will be even more so. Due to plant age and/or size, CCS retrofits might not be cost-effective for all existing power plants. If an existing plant is too old, or too small, owners may not be able to justify the large capital investment required to retrofit CCS. The size and space requirements for CO_2 capture process equipment is significantly larger than that required for conventional air pollution controls such as selective catalytic reduction (SCR), precipitator/fabric filter, or flue gas desulfurization. Providing adequate space for CCS retrofit could prove difficult for many plants. In addition, construction will have to be done around the existing equipment at the plant. All of these things lead to additional costs associated with the retrofit. It is also likely that optimizing the energy integration of the CO_2 capture and compression system with an existing plant's steam cycle will be more difficult than for a new plant. Another concern for retrofit applications is that the CO_2 capture and compression equipment requires a relatively large quantity of cooling water, which could be a challenge for some plants since excess cooling capability is unlikely to be available. Another potential retrofit issue is a plant's proximity to a sequestration site and/or CO_2 pipeline.

D. The Role of RD&D in Reducing the Cost of CO_2 Capture

The preceding section reviewed some of the major cost and performance issues associated with currently available CO_2 capture technologies. One of the goals of DOE/NETL's CO_2 capture technology RD&D effort is the development of technologies that minimize the impacts of CO_2 capture on the COE. This section discusses the general role that RD&D can play in reducing those costs. Figure 2-11 depicts the conceptual relationship between the increase in LCOE due to the addition of post-combustion CO_2 capture and the thermodynamic efficiency of the CO_2 capture process. The figure shows this relationship for three CO_2 capture processes: (1) a state-of-the-art amine-based solvent process; (2) an improved "learn-by-doing" state-of-the-art amine-based solvent process; and (3) a potential new advanced CO_2 capture technology process. The curves in the figure are meant to portray the conceptual relationship between CO_2 capture cost and process thermodynamic efficiency. As such, the curves are not based on actual data. The thermodynamic efficiency is defined

as the ratio of the theoretical minimum energy required to separate 90 percent of the CO_2 from N_2 in the flue gas to the actual energy required. NETL estimates the theoretical minimum energy required for CO_2 separation and compression to be approximately 440 kJ/kg CO_2. For comparison, NETL estimates the actual energy required for CO_2 separation and compression using a state-of-the-art MEA-based solvent CO_2 capture technology is approximately 1,500 kJ/kg CO_2. This would be equivalent to a thermodynamic efficiency of almost 30 percent (440/1,500). The theoretical minimum energy also establishes a minimum increase in the COE that can be achieved, which is shown as the horizontal dashed line at the bottom of the figure.

The solid blue line in the figure illustrates the conceptual relationship between increase in COE and thermodynamic efficiency for a state-of-the-art amine-based solvent process. The CO_2 capture process can be designed with varying degrees of thermodynamic efficiency (e.g., the amount of heat integration in the plant will strongly affect efficiency). Low levels of efficiency will result in large increases in the COE, due to the significant economic penalties associated with parasitic power losses. At the other extreme, CO_2 capture process designs with very high efficiencies will also be expensive due to the addition of costly equipment required to achieve these efficiencies. An optimum exists that balances decreased operating costs due to improved efficiency against the additional capital costs associated with higher efficiency process designs.

The state-of-the-art COE-efficiency curve is conceptual, in that commercial power plants have not yet been built or retrofitted with CO_2 capture technologies. Previous experience with introduction of other new technologies, and in particular other flue-gas clean-up technologies, indicates that the demonstration and first-commercial plants will have higher costs and slightly lower efficiencies than the optimum represented by the state-of-the-art COE-efficiency curve. A representative performance envelope for early plants is identified by the red-shaded area in the figure. The higher costs and lower efficiencies are associated with unanticipated construction and operating problems common to the adoption of new technologies, and to process limitations which could not be identified at smaller scales of process demonstration. In addition, early demonstrations are typically conservative in regards to pushing the limits of the technology. Therefore, process improvements that add complexity and increase the risk of a project are added in future implementations as experience with the overall system is obtained.

As more plants are built and experience is gained in designing and operating CO_2 capture systems, the state-of-the-art COE-efficiency curve will shift to lower costs and higher thermodynamic efficiencies. This phenomenon is often referred to as "learning-by-doing" and is represented as the blue dashed line in the figure. However, the overall shape of the curve will remain about the same as the state-of-the-art, and process designs above the optimum improved efficiencies will still lead to higher COE. While "learning-by-doing" can result in somewhat limited improvements over time, it cannot provide the significant step changes in cost and performance required to make CO_2 capture more economically viable. As shown by the red dashed line in the figure, the development of new advanced CO_2 capture processes based on both fundamental and applied R&D is necessary to achieve major improvements in both the thermodynamic capture efficiency and cost of CO_2 capture.

E. The RD&D Process – Progress Over Time

DOE/NETL's CO_2 capture RD&D timeline is consistent with the President's plan to overcome the barriers to the widespread, cost-effective deployment of CCS within 10 years.[8] To that end, DOE/NETL envisions having a CO_2 capture technology portfolio ready for full-scale demonstration by 2020 that provides for the safe, cost-effective carbon management that will meet our Nation's goals for reducing GHG emissions. NETL's CO_2 capture RD&D effort is pursuing a wide variety of advanced CO_2 capture technologies, including liquid solvents, solid sorbents, membranes, oxy-combustion, and chemical looping combustion (CLC). Current RD&D studies also include development of several innovative concepts, such as MOFs and ILs.

One or more of these advanced technologies should be available for full-scale demonstration by 2020 after the sequential progression of laboratory-, bench-, and pilot-scale testing has been successfully completed under the core R&D programs. Figure 2-12 describes the various stages of the RD&D process. The development of an advanced CO_2 capture technology includes more than just a laboratory-scale evaluation of the process chemistry and associated operating parameters before it can

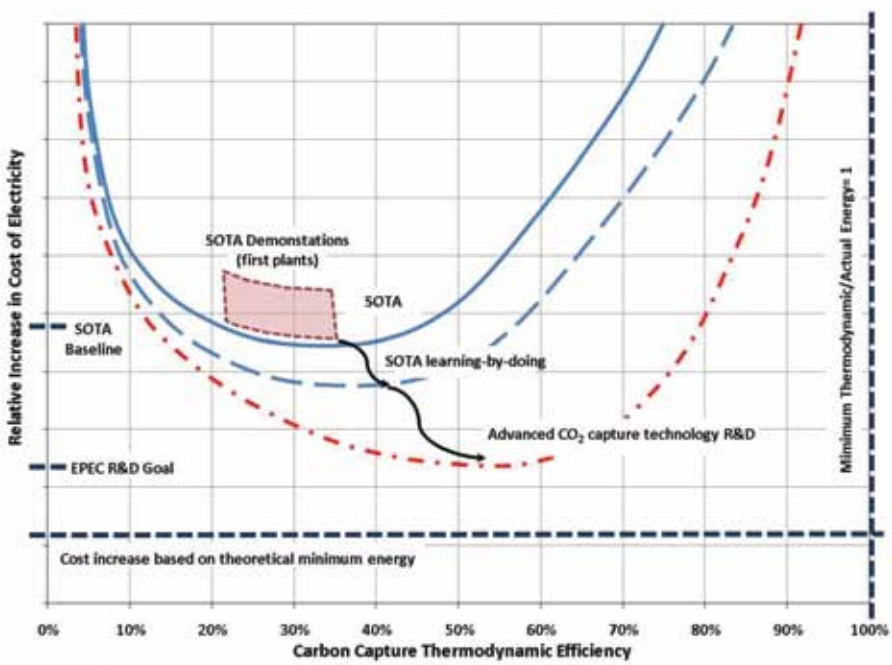

Figure 2-11. Relationship Between COE and Thermodynamic Efficiency of the CO_2 Capture Process

Stages of CO_2 Capture Techology Development

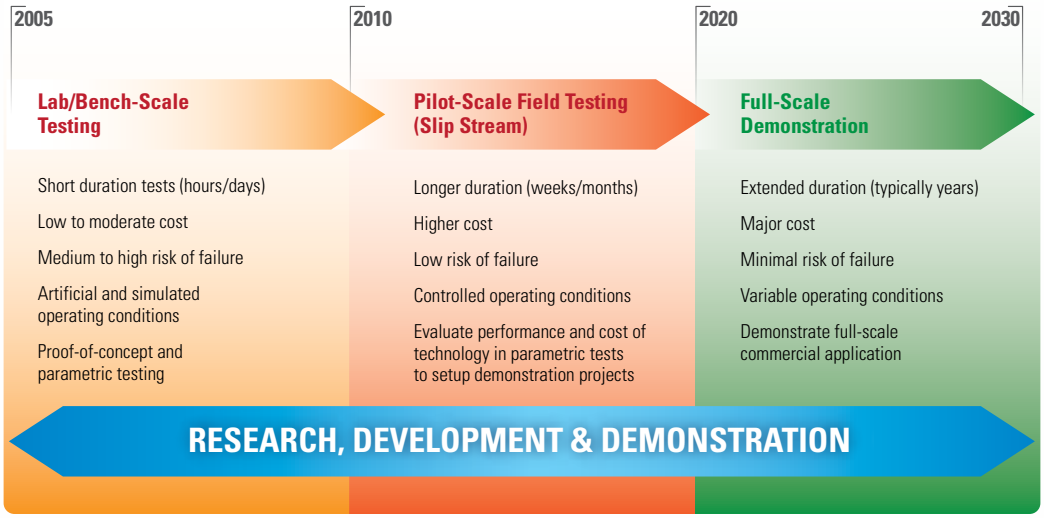

Figure 2-12. Stages of Advanced CO_2 Capture Technology RD&D

be commercialized. The research effort can also require the development of a new or improved manufacturing process to commercially produce the chemicals and/or devices used to support the process. Just as important is conducting systems analyses to evaluate the cost-effective integration of the process into the power plant thermodynamic cycle.

Upon completion of laboratory- and bench-scale testing, it is necessary to conduct pilot-scale slipstream testing using actual flue gas to determine potential adverse effects on the process from minor constituents in the coal that are present in the syngas or combustion flue gas. For example, trace concentrations of arsenic in some coals were found to poison the catalyst used in the SCR process for control of NO_x from coal-fired power plants. Likewise, low concentrations of SO_2 are known to degrade amine solvent performance. In addition, potential problems with excessive scaling, plugging, and/or corrosion of process equipment can only be evaluated and solutions developed via operating experience during long-term, pilot-scale slipstream, or full-scale testing. After successful completion of pilot-scale testing, the process equipment can be further scaled-up to conduct large-scale field testing prior to commercial deployment of the technology.

Laboratory- and bench-scale testing is usually conducted with simulated flue or synthesis gas at relatively low gas flow rates ranging from 1 to 100 standard cubic feet per minute (scfm). Small pilot-scale testing can also be conducted in a laboratory setting as a "semi-batch" mode using coal combustors to generate flue gas for process testing. For example, the University of North Dakota's Energy and Environment Research Center (UNDEERC) uses two sizes of combustors for small pilot-scale testing with equivalent gas flow rates of approximately 10 scfm and 125 scfm. The flue gas design flow rate for NETL's large

Progress Over Time

An example of the scale-up process is the RD&D being conducted by Membrane Technology and Research, Inc. (MTR) to develop a new membrane-based post-combustion CO_2 capture technology. In April 2007, MTR initiated a two-year RD&D project with NETL. MTR's first phase of RD&D included bench-scale testing of various membrane designs using a simulated gas flow rate of approximately 2.5 scfm. Based on successful bench-scale testing, MTR initiated a follow-up project with NETL in October 2008 to conduct a small pilot-scale field test that was conducted in 2010. The approximately 175 scfm (1 ton CO_2 per day) slipstream testing was conducted at the Arizona Public Service's coal-fired Cholla Power Plant located in Arizona. MTR now plans to conduct additional pilot-scale testing of a proof-of-concept system at Cholla based on a gas flow rate of approximately 2,500 scfm as part of a new project that NETL awarded in late 2010.

pilot-scale slip-stream testing, including those conducted at the National Carbon Capture Center (NCCC), will be in the range of 1,000 to 12,000 scfm. For comparison, 1 MW gross electric generation produces approximately 2,500 scfm of combustion flue gas.

F. CO_2 Capture Technology RD&D Goals and Targets

The goal of NETL's CO_2 capture technology RD&D effort is to develop fossil fuel conversion systems that achieve 90 percent CO_2 capture at a less than 10 percent increase in COE for pre-combustion capture at IGCC power plants and a less than 35 percent increase in COE for post- and oxy-combustion capture at new and existing conventional coal-fired power plants. Reaching these goals require an integrated RD&D effort linking fundamental advances in CCS to practical advances in technologies amenable to extended commercial use. By 2016, the RD&D effort seeks to have small pilot-scale unit operation performance results from a combination of CO_2 capture, storage, and MVA system components such that, when integrated into a systems analysis framework, would collectively meet the above goals. Accounting for the lag between pilot- and full-scale demonstration of technologies that meet the goals, full-scale CCS systems should be commercially available by 2030.

These program targets represent an approximation of the anticipated progression of the RD&D process to large pilot-scale (~25 MWe). Uncertainty also exists as to whether or not there will be future rounds of large-scale demonstration projects similar in scale to those described in Chapter 1. The current portfolio of technologies is at various stages of maturity and the development pace of specific technologies will unlikely proceed at the same rate – some technologies could become available for commercial deployment sooner depending on industry acceptance and CO_2 regulatory drivers.

1. Pre-Combustion RD&D Targets

The near-term target for pre-combustion CO_2 capture is for advanced IGCC technologies to be integrated at small pilot-scale with CO_2 separation, capture, and storage into "near-zero" atmospheric emissions configurations by 2015 that can meet the cost and performance goals stated above. The 10 percent increase in COE goal was determined to be the lowest electric generating cost technically achievable, given the improvements in efficiency and the reduction in capital and operating costs expected from integrated technologies within the RD&D effort.

Removing 90 percent CO_2 from a power plant at increased efficiency and reduced costs requires a combination of advances in gasification, gas cleanup and separation, and power cycle technology that provide synergistic benefits when combined with CCS. Unlike post-combustion capture, which is added to the back-end of a conventional coal-fired plant, pre-combustion CO_2 capture is a fully integrated system within the IGCC plant. Progress in CO_2 capture technology cannot be assessed without considering the impacts and improvements of other parts of the IGCC system. Some of the advanced conversion technologies exhaust the syngas stream at conditions that are more amenable to CO_2 capture, improving the overall process efficiency. Conversely, some advanced capture systems provide heat and pressure integration that fit well with the requirements of the power island and criteria pollutant control systems providing an opportunity to increase power output and reduce auxiliary loads. Reductions in parasitic load in one section of the plant can have the impact of further reducing parasitic load in another portion of the process, providing additional savings.

The DOE/NETL pre-combustion CO_2 capture RD&D effort includes the following future targets that are planned to be completed by 2015:

- Develop a portfolio of bench-scale pre-combustion technologies which, if combined with other technology improvements, will enable the new power production technology with CO_2 capture to produce electricity at a cost of no more than 10 percent when compared to a conventional non-captured power plant.
- Complete small pilot-scale testing of the CO_2 capture technologies that were successful at bench scale and identify opportunities for integration of the technologies with the power plant.
- Initiate second generation advanced CO_2 capture technologies that have the capability to reduce costs to near zero, reduce energy penalties, and improve performance over first generation CO_2 capture technologies that are currently being tested at small pilot-scale.

2. Post-Combustion and Oxy-Combustion RD&D Targets

DOE/NETL's CO_2 capture RD&D effort is pursuing a wide variety of advanced CO_2 capture technologies. It is anticipated that successful progression from laboratory- to full-scale demonstration will result in several of these technologies being available for commercial deployment by 2030. The critical RD&D targets supporting the achievement of the program goals began with laboratory- and bench-scale testing of advanced concepts for post- and oxy-combustion technologies in 2008, followed by multiple pilot-scale slipstream field tests beginning in 2010. The DOE/NETL post- and oxy-combustion CO_2 capture RD&D effort includes the following future targets:

- By 2013, complete bench-scale development of advanced post- and oxy-combustion CO_2 capture technologies.
- By 2016, complete small pilot-scale field testing (0.5 to 5 MW) at operating power plants and other industrial facilities.
- By 2020, complete large pilot-scale field testing (~ 25MW) of advanced post- and oxy-combustion CO_2 capture technologies.

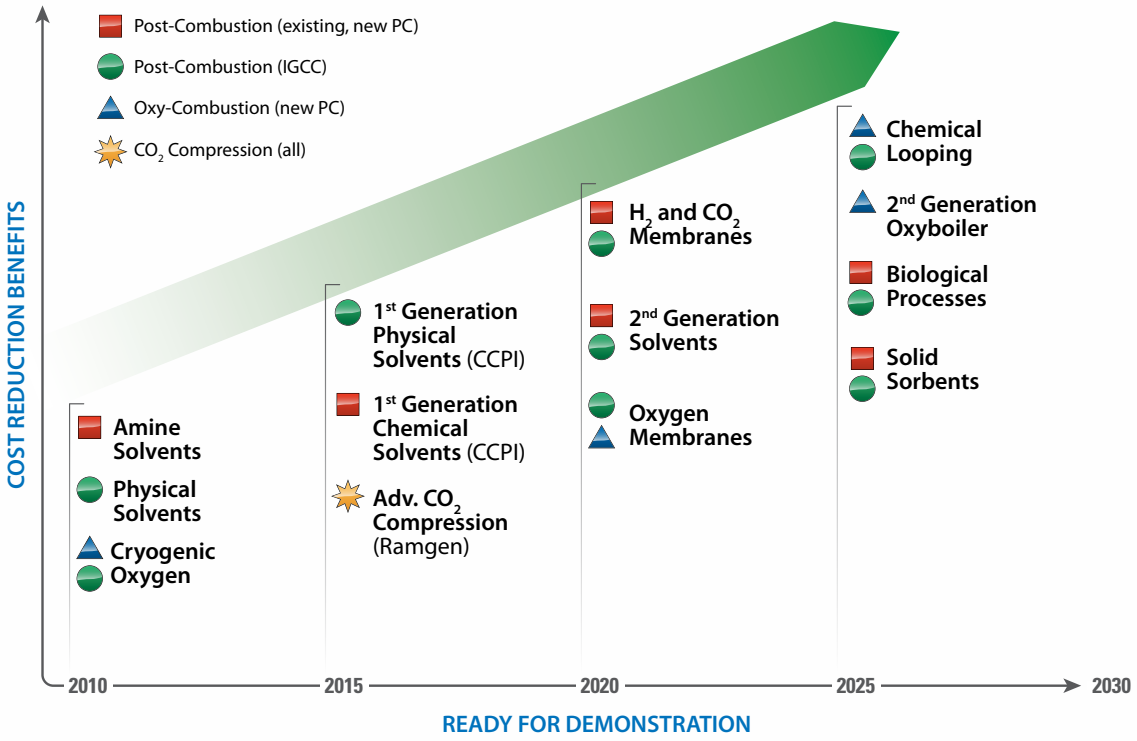

Figure 2-13. DOE/NETL CO_2 Capture Technology Development

G. DOE/NETL CO_2 Capture Technology Pathways

DOE/NETL is investigating a broad portfolio of research pathways in three general technology approaches for CO_2 capture—pre-, post-, and oxy-combustion. The pre- and post-combustion technology approaches include various types of solvents, sorbents, and membranes for CO_2 capture. The oxy-combustion technology approach also includes research on oxygen production, flue gas purification, and CLC. Current efforts cover not only improvements to state-of-the-art technologies, but also development of several innovative concepts, such as MOFs and ILs. Significant cost-reduction benefits can potentially be realized through aggressive RD&D of innovative CO_2 capture technologies. DOE/NETL believes that one or more of these technologies should be commercially-available by 2030 after the necessary step-wise completion of laboratory-, bench-, pilot-, and full-scale testing has been successfully completed. Figure 2-13 is a representation of DOE/NETL's CO_2 capture technology development cost-reduction benefits versus time to full-scale demonstration.

Due to differences in plant age, size, configuration, and other site-specific factors, it is expected that a suite of CO_2 capture technologies will be required for electric utilities to choose from in order to achieve significant reductions in emissions from coal-based power plants without significantly increasing COE. DOE/NETL is conducting numerous CO_2 capture RD&D projects aimed at developing novel and cost-effective CO_2 capture technologies for coal-fired power plants. These laboratory- through pilot-scale projects are being performed through extramural research and by NETL's ORD. The objective of these projects is to identify and develop advanced CO_2 capture technologies capable of achieving the program goals and be commercially available by 2030. A companion report, titled, "DOE/NETL Advanced Carbon Dioxide Capture R&D Program: Technology Update," was issued in September 2010 and provides greater detail on DOE/NETL's CO_2 capture R&D effort, including a brief status for each of the individual projects.

1. Pre-Combustion CO_2 Capture – Advanced Technology Approaches

DOE/NETL is currently funding the development of several advanced pre-combustion CO_2 capture technologies that have the potential to provide significant improvements in both cost and performance as compared to the physical solvent-based Selex-

Table 2-1. Pre-Combustion Technology Advantages and Challenges

CO_2 Capture Technology	Advantages	Challenges
Physical Solvent	• CO_2 recovery does not require heat to reverse a chemical reaction. • Common for same solvent to have high H_2S solubility, allowing for combined CO_2/H_2S removal. • System concepts in which CO_2 is recovered with some steam stripping rather than flashed, and delivered at a higher pressure may optimize processes for power systems.	• CO_2 pressure is lost during flash recovery. • Must cool down synthesis gas for CO_2 capture, then heat it back up again and re-humidify for firing to turbine. • Low solubilities can require circulating large volumes of solvent, resulting in large pump loads. • Some H_2 may be lost with the CO_2.

CO_2 Capture Technology	Advantages	Challenges
Solid Sorbent	• CO_2 recovery does not require heat to reverse a reaction. • Common for H_2S to also have high solubility in the same sorbent, meaning CO_2 and H_2S capture can be combined. • System concepts in which CO_2 is recovered with some steam stripping rather than flashed, and delivered at a higher pressure may optimize processes for power systems.	• CO_2 pressure is lost during flash recovery. • Must cool synthesis gas for CO_2 capture, then heat it back up again and re-humidify for firing to turbine. • Some H_2 may be lost with the CO_2.
H_2/CO_2 Membrane	H_2 or CO_2 Permeable Membrane: • No steam load or chemical attrition. H_2 Permeable Membrane Only: • Can deliver CO_2 at high-pressure, greatly reducing compression costs. • H_2 permeation can drive the CO shift reaction toward completion – potentially achieving the shift at lower cost/higher temperatures.	• Membrane separation of H_2 and CO_2 is more challenging than the difference in molecular weights implies. • Due to decreasing partial pressure differentials, some H_2 will be lost with the CO_2. • In H_2 selective membranes, H_2 compression is required and offsets the gains of delivering CO_2 at pressure. In CO_2 selective membranes, CO_2 is generated at low pressure requiring compression.
Water Gas Shift Membrane	• Promote higher conversion of CO and H_2O to CO_2 and H_2 than is achieved in a conventional WGS reactor. • Reduce CO_2 capture costs. • Reduce H_2 production costs. • Increase net plant efficiency.	• Single stage WGS with membrane integration • Improved selectivity of H_2 or CO_2 • Optimize membranes for WGS reactor conditions

ol™ and Rectisol® processes. The DOE/NETL RD&D projects are focused on physical solvents, solid sorbents, and membrane-based systems for the separation of H_2 and CO_2 as shown in Table 2-1 and discussed in more detail in the following sections.

Pre-Combustion Solvent-Based Processes

There are two general categories of solvents that can be used for pre-combustion CO_2 absorption—chemical and physical. As the name implies, a chemical solvent relies on a chemical reaction for absorption, whereas a physical solvent selectively absorbs

Pre-Combustion Solvent R&D Project Highlight
Ammonium Carbonate

SRI International is developing a pre-combustion chemical solvent CO_2 capture technology based on the use of a high-capacity and low-cost aqueous solution containing ammonium carbonate (AC), which reacts with CO_2 to form ammonium bicarbonate (ABC). The ABC solution is heated to release the CO_2 and regenerate the AC solution. AC has high net CO_2 loading, is a low-cost and readily available reagent, and requires little solvent makeup. Pilot-scale testing will be performed on a slip stream of Great Point Energy's 1 ton/day pilot gasifier located at Brayton Point, Massachusetts.

Pre-Combustion Sorbent R&D Project Highlight

Sorbent-Enhanced Water Gas Shift

URS Group, Inc. is developing a high-pressure and high-temperature dry sorbent process that combines CO_2 capture with the WGS reaction. If successful, the sorbents developed in this program will augment or replace the CO conversion catalysts currently used in WGS reactors and improve overall WGS thermal efficiency. The major advantages of this high-temperature sorbent include eliminating or reducing the amount of WGS catalyst required to fully shift the syngas to CO_2 and H_2 and eliminating syngas cooling/reheating that is necessary for current physical solvent CO_2 separation systems.

CO_2 without a chemical reaction. The main benefit of a physical solvent, as compared to a chemical solvent, is that it requires less energy for regeneration. However, chemical solvents offer the advantage of increased mass transfer driving force into solution and increased acid gas selectivity. In addition, chemical solvents offer an opportunity to be used in processes that utilize thermal swing regeneration and generate the CO_2 at elevated pressure.

Physical solvents are viewed as an efficient approach for processing high-pressure, CO_2-rich streams, such as those encountered in IGCC systems that employ an upstream WGS reactor. Both Selexol and Rectisol are physical solvents. However, these solvent-based processes have several disadvantages, including loss of pressure during regeneration and requirement of a low operating temperature, thus requiring cooling of the syngas prior to CO_2 absorption, followed by reheating to gas turbine inlet temperature. Advanced solvent-based processes that can capture CO_2 at elevated temperatures and produce a high-pressure CO_2 product stream are necessary.

DOE/NETL is funding the development of advanced physical and chemical solvent systems for pre-combustion CO_2 capture. Potential physical solvent process improvements include: modifying regeneration conditions to recover the CO_2 at a higher pressure; improving selectivity to reduce H_2 losses; and developing a solvent that has a high CO_2 loading at a higher temperature, which would improve IGCC efficiency. Potential chemical solvent process improvements focus on development of a solvent to react with CO_2 and utilize a combination of thermal and pressure swing regeneration to efficiently separate CO_2 from the syngas while maintaining pressure.

Pre-Combustion Sorbent-Based Processes

DOE/NETL is also exploring the development of solid sorbents for pre-combustion CO_2 capture from syngas. These sorbents must maintain a high adsorption capacity, be resistant to attrition over multiple regeneration cycles, and exhibit good CO_2 separation and selectivity performance at the high temperatures encountered in IGCC systems to avoid the need for syngas cooling.

Sorbent-based processes work on the basis that one component of a gaseous mixture is more strongly adsorbed on the surface of a solid particle than other components. The adsorption may be either physical or chemical. Physical adsorption of gases on solid adsorbents is a surface phenomenon in which the adsorbed gases are held by weak surface forces. The capacity of the adsorbent for a given gas depends on the operating temperature and pressure. The higher the partial pressure or the lower the temperature, the greater is the adsorption capacity of the system. The loaded adsorbent can be regenerated via a change in pressure or temperature. In pressure swing adsorption (PSA), the syngas flows through a packed bed of adsorbent at elevated pressure until the adsorption of CO_2 approaches equilibrium with the solid. The bed is then regenerated by stopping the feed mixture and reducing the pressure. In temperature swing adsorption (TSA), the adsorbent is regenerated by raising its temperature.

Pre-Combustion Membrane-Based Processes

Membrane-based CO_2 capture uses permeable materials that allow for the selective transport and separation of CO_2 or H_2 from the syngas. Different types of membrane materials are available, including polymeric membranes, porous inorganic membranes, palladium membranes, and zeolite membranes. Membrane separation uses partial pressure difference as the driving force and is thus suitable for pre-combustion CO_2 capture.

Gas separation membranes are based on differences in physical or chemical interactions between gases and the membrane material, thereby allowing one component to pass through the membrane at a faster rate than the other components. The membrane

Pre-Combustion Membrane R&D Project Highlight

Polybenzimidazole (PBI) Membrane

SRI International is testing a high-temperature PBI polymer membrane developed by Los Alamos National Laboratory (LANL). The membrane consists of hollow fiber PBI, which is chemically and thermally stable at temperatures up to 450°C and pressures up to 55 atm (800 psig). This characteristic permits the use of a membrane for CO_2 capture without requiring additional syngas cooling after the WGS reactor, which would increase plant efficiency. In addition, the CO_2 is recovered at high pressure, decreasing CO_2 compression requirements.

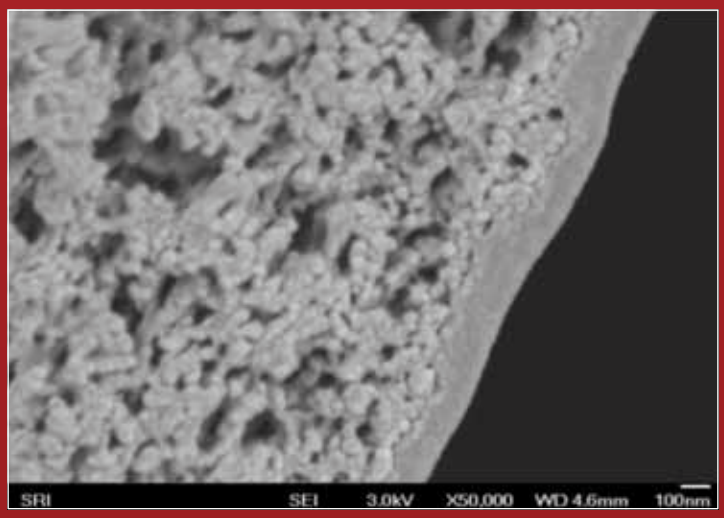

divides the feed gas stream into a permeate stream, that is rich in the gas component being separated, and a retentate stream. The separation efficiency is determined by the membrane selectivity, the ratio of the permeate flow to the feed flow, and the ratio of permeate pressure to the feed pressure. Usually the selectivity of the membranes in one stage is insufficient to achieve the desired purities and recoveries, so multiple stages and recycle may be required in an actual operation, leading to increased complexity, energy consumption, and capital costs.

In pre-combustion CO_2 separation there are two basic types of membrane: CO_2 selective membrane and H_2 selective membrane. For a CO_2-selective membrane, CO_2 selectively permeates the membrane and the permeate is a relatively pure CO_2 stream. For an H_2-selective membrane, the permeate is a relatively pure H_2 stream. The advantages of a CO_2-selective membrane are that the H_2 recovery rate can be high and the CO_2 product is pure. The disadvantages are the H_2 product in the retentate will contain a certain amount of CO_2 and the CO_2 product in the permeate will be at a lower pressure and has to be compressed further to sequestration ready pressure (approximately 2,200 psia). The advantages of an H_2-selective membrane are that the CO_2 product in the retentate will be at high pressure (less compression work is required in preparation for pipeline transport and storage) and pure H_2 in the permeate can be easily achieved. The disadvantages are that it is difficult to achieve a high H_2 recovery rate (some H_2 will remain in retentate or CO_2 sequestered stream) and the CO_2 product in the retentate has to be further purified. Generally speaking, a membrane process has difficulty to achieve both high recovery rate and high purity of the same product in one stage.

There are several technical barriers that must still be overcome to reduce the cost and improve the performance of membrane systems. Methods must be found to improve separation and throughput and prevent membranes from becoming less effective over time. The main properties of a membrane which could improve performance are its CO_2 selectivity and permeability. While critical research is focused in these areas, the thermal and hydrothermal stabilities of the membrane, as well as other physical and chemical properties, also need to be considered. Scale-up studies must determine their potential for lower cost and efficient operation in integrated systems. Large-scale manufacturing methods for defect-free membranes and modules must be developed. Better methods are needed to make high-temperature, high-pressure seals using ceramic substrates. To address these technology challenges, DOE/NETL is funding the development of a wide variety of membrane-based systems for pre-combustion CO_2 capture.

Improved Water Gas Shift Reactor

The WGS reaction is necessary for increased CO_2 separation and capture. The WGS reaction is typically equilibrium controlled and, if the required CO_2 removal is high, multiple reactors operating at progressively lower temperatures are required. However, if one of the syngas products, either H_2 or CO_2, can be continuously removed from the reactor, equilibrium will be shifted and the conversion of CO to CO_2 can be accomplished in a single reactor. Therefore, a WGS reactor integrated with a separation membrane to continuously separate CO_2 or H_2 would be desirable.

In a WGS membrane reactor, the wall is replaced with a selective permeable membrane. The permeate, either H_2 or CO_2, is removed from the reactor to allow the WGS reaction to continue to

completion. Important aspects for development of a membrane reactor are sufficient selectivity, permeability, and high-temperature stability to allow the membrane to be integrated into the IGCC process. To reduce the amount of H_2 left in the retentate (H_2 loss), a high-performance H_2 membrane is desirable. A CO_2 membrane reactor is also of interest since it may be difficult to provide a sufficiently pure CO_2 stream with an H_2 membrane-based reactor.

An adsorption-enhanced WGS reactor is another way to integrate separation into a WGS reactor. Employing a sorbent may significantly reduce the amount of catalyst necessary for a given conversion, or at a high enough temperature, the reaction may be able to proceed without a catalyst. Sorbents having a low heat of desorption, good capacity, and long-term stability are desirable. Novel system configurations are required to combine the kinetics of both WGS and chemical adsorption and integrate the heat use with the power plant.

Pre-Combustion Novel Concepts

DOE/NETL is pursuing novel concepts that could revolutionize CO_2 capture. Such a technology may fall into any of the above categories, including solvents, sorbents, and membranes—or it could be entirely new. One example is a CO_2-philic material which can form a new phase. These solid compounds have the ability to "melt" in CO_2 at high CO_2 pressure (~1,000 psia) and release all of the absorbed CO_2 at high pressure (950 psia). If this behavior persists with CO_2-H_2 mixtures, then it may be possible to absorb CO_2 selectively at about 1,000 psia and evolve it at 950 psia. This high-pressure evolution would enable a high-pressure, high-purity CO_2 stream to be recovered from the regenerator, while a slightly higher pressure H_2 stream was recovered from the column. Thus, both high-pressure H_2 and high-pressure CO_2 would be generated.

2. Post-Combustion CO_2 Capture – Advanced Technology Approaches

DOE/NETL is currently funding the development of advanced post-combustion CO_2 capture technologies that have the potential to provide significant reductions in both cost and energy demand as compared to currently available amine-based scrubbing technologies. The DOE/NETL RD&D projects are focused on solvents, solid sorbents, and membrane-based systems for the separation of CO_2 as shown in Table 2-2 and discussed in more detail in the following sections.

Table 2-2. Post-Combustion Technology Advantages and Challenges

CO_2 Capture Technology	Advantages	Challenges
Solvent	• Chemical solvents provide a high chemical potential (or driving force) necessary for selective capture from streams with low CO_2 partial pressure. • Wet-scrubbing allows good heat integration and ease of heat management (useful for exothermic absorption reactions).	• Trade off between heat of reaction and kinetics. Current solvents require a significant amount of steam to reverse chemical reactions and regenerate the solvent, which de-rates power plant. • Energy required to heat, cool, and pump non-reactive carrier liquid (usually water) is often significant. • Vacuum stripping can reduce regeneration steam requirements, but is expensive.
Solid Sorbent	• Chemical sites provide large capacities and fast kinetics, enabling capture from streams with low CO_2 partial pressure. • Higher capacities on a per mass or volume basis than similar wet-scrubbing chemicals. • Lower heating requirements than wet-scrubbing in many cases (CO_2 and heat capacity dependent). • Dry process—less sensible heating requirement than wet scrubbing process.	• Heat required to reverse chemical reaction (although generally less than in wet-scrubbing cases). • Heat management in solid systems is difficult, which can limit capacity and/or create operational issues when absorption reaction is exothermic. • Pressure drop can be large in flue gas applications. • Sorbent attrition.
Membrane	• No steam load. • No chemicals. • Simple and modular designs. • 'Unit operation' versus complex 'process.'	• Membranes tend to be more suitable for high-pressure processes such as IGCC. • Trade off between recovery rate and product purity (difficult to meet both high recovery rate and high purity). • Requires high selectivity (due to CO_2 concentration and low pressure ratio). • Poor economy of scale • Multiple stages and recycle streams may be required.

Post-Combustion Solvents

Post-combustion solvent-based CO_2 capture involves chemical or physical sorption of CO_2 from flue gas into a liquid carrier. As discussed previously, solvent-based systems are in commercial use today scrubbing CO_2 from industrial flue gases and process gases; however, they have not been applied to removing large volumes of CO_2, as would be encountered in the flue gas from coal-fired power plants. Research projects in this pathway address technical challenges to solvent-based CO_2 capture, such as large flue gas volume, relatively low CO_2 concentration, flue gas contaminants, and high parasitic power demand for solvent regeneration. DOE/NETL's RD&D focus for post-combustion solvents includes development of low-cost, non-corrosive solvents that have a high CO_2 loading capacity, improved reaction kinetics, low regeneration energy, and resistant to degradation.

Chemical Solvents – Chemical absorption involves one or more reversible chemical reactions between CO_2 and an aqueous solution of an absorbent, such as an alkanolamine (e.g., MEA), hindered amine, aqueous ammonia, or a carbonate, to form water-soluble compounds. Although high levels of CO_2 capture are possible, the drawback of this process is that significant amounts of energy are required in the regeneration step, which involves a temperature swing to break the absorbent-CO_2 chemical bond. DOE/NETL is investigating advanced solvents that have lower regeneration heat duties than MEA, and that are also resistant to flue gas impurities.

Physical Solvents – Another CO_2 capture process currently being used in smaller-scale industrial applications—physical absorption—is a bulk phenomenon where inorganic or organic liquids preferentially absorb a gaseous species from the gas mixture. Although physical solvent regeneration is less energy-intensive than chemical systems, this technology is considered more practical for processing the high-pressure syngas generated at IGCC plants since CO_2 solubility in physical solvents increases with partial pressure. However, DOE/NETL-funded researchers are investigating a new class of physical solvents that are designed to capture CO_2 from low-pressure flue gas streams. ILs include a broad category of salts, typically containing an organic cation and either an inorganic or organic anion. ILs have high thermal stability and low volatility that is beneficial for CO_2 capture processes since this can help minimize solvent losses and could be a more cost-effective solution than current technologies. One possible drawback is that the high viscosity of many ILs could adversely affect the ability to pump ILs in a power plant application. ILs are still at the laboratory stage of development and further research is required.

Post-Combustion Chemical Sorbents

Solid sorbents, including sodium and potassium oxides, zeolites, carbonates, amine-enriched sorbents, and MOFs, are also being explored for post-combustion CO_2 capture. A temperature swing facilitates sorbent regeneration following chemical and/or physical adsorption, but a key attribute of CO_2 sorbents is that no water is present, compared to solvent-based systems, thereby reducing the sensible heating and stripping energy requirements. Possible configurations for contacting the flue gas with the sorbents include fixed, moving, and fluidized beds.

Research projects in this pathway focus on the development of sorbents with the following characteristics: low-cost raw materials; thermally and chemically stable; low attrition rates; low heat capacity; high CO_2 absorption capacity; and high CO_2 selectivity. Another important focus of the research is to develop cost-

Post-Combustion Sorbent R&D Project Highlight

Metal Organic Frameworks

UOP, LLC is developing a new class of sorbents known as MOFs, which are manufactured, micro porous, thermally stable materials that have the potential for high CO_2 adsorption capacity. MOFs represent a class of porous materials that offer several advantages for CO_2 capture, such as ordered structures, high thermal stability, adjustable chemical functionality, extra-high porosity, and the availability of hundreds of crystalline, well-characterized porous structures. Based on their properties, MOF-based sorbents would be utilized in a vacuum pressure swing adsorption (VPSA) process for removal of CO_2 from flue gas.

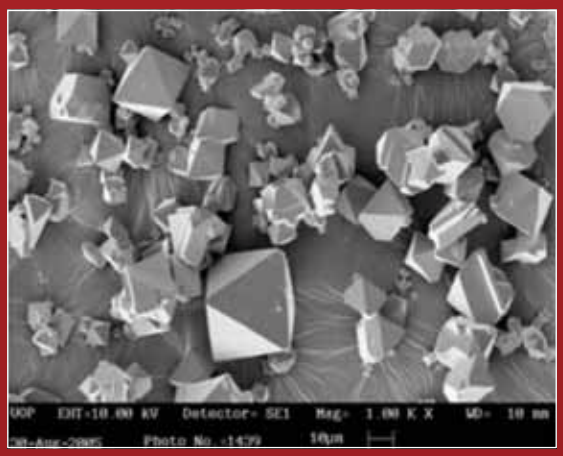

effective process equipment designs that are tailored to the sorbent characteristics. NETL's ORD is developing amine-enriched solid sorbents for post-combustion CO_2 capture. The sorbents are prepared by treating high surface area substrates with various amine compounds. The sorbents show better CO_2 capture capacities and lower regeneration temperatures than conventional amine-based liquid solvents. In collaboration with West Virginia University and the University of Pittsburgh, ORD is examining the use of surface immobilization nanotechnology to graft amine compounds on a high surface area solid sorbent substrate to optimize CO_2 capture.

Post-Combustion Membranes

Post-combustion membrane-based CO_2 capture uses permeable or semi-permeable materials that allow for the selective transport and separation of CO_2 from flue gas. Their potential is generally viewed positively for high-pressure applications, such as IGCC, but not as promising for low-pressure combustion flue gas without further process enhancements. Diffusion mechanisms in membranes differ depending on the type of membrane used. Generally, gas separation is accomplished by some physical or chemical interaction between the membrane and the gas being separated, causing one component in the gas to permeate through the membrane faster than another. Usually the selectivity of the membrane is insufficient to achieve the desired purities and recoveries, therefore multiple stages and recycle streams may be required in an actual operation, leading to increased complexity, energy consumption, and capital costs.

Research has been conducted with a number of different types of gas separation membranes, including polymer, palladium, facilitated transport, and molecular sieves. Gas absorption membrane technologies are also under development, where the separation is caused by the presence of an absorption liquid on one side of the membrane that selectively removes CO_2 from a gas stream on the other side of the membrane. An example of this type of membrane would be the membrane-solvent systems that use an amine as the solvent.

Research projects in this pathway address key technical challenges to the use of membrane-based systems, such as large flue gas volume, relatively low CO_2 concentration, low flue gas pressure, flue gas contaminants, and the need for high membrane surface area. DOE/NETL's RD&D focus for post-combustion membranes includes development of low-cost, durable membranes that have improved selectivity, thermal and physical stability, and tolerant of contaminants in combustion flue gas.

3. Oxy-Combustion CO_2 Capture – Advanced Technology Approaches

Oxy-combustion power systems for CO_2 capture rely on combusting coal with relatively pure oxygen diluted with recycled CO_2 or CO_2/steam mixtures such that the primary products of combustion are CO_2 and water. The characteristics of oxy-combustion have not yet been fully developed. Oxy-combustion flame characteristics, burner and coal-feed design, and analyses of the interaction of oxy-combustion products with boiler materials are all areas in need of more research. As a result, projects in

Post-Combustion Membrane R&D Project Highlight

Membrane Process Configuration

MTR is developing a spiral-wound, polymeric membrane and associated process for CO_2 capture. MTR's process design includes two types of membrane arrangements – a conventional cross-flow module and a novel countercurrent sweep module. First, the combustion flue gas enters a cross-flow module, which removes most of the CO_2. The retentate from the cross-flow module is then fed into a countercurrent sweep module, from which the permeate is recycled back to the boiler via an air sweep, which increases the CO_2 concentration of the flue gas entering the initial cross-flow module. The CO_2-rich permeate from the cross-flow module is then dehydrated and compressed. A second stage cross-flow module is used after compression to further enrich the CO_2 stream by recycle of the permeate back to the inlet of the compressor.

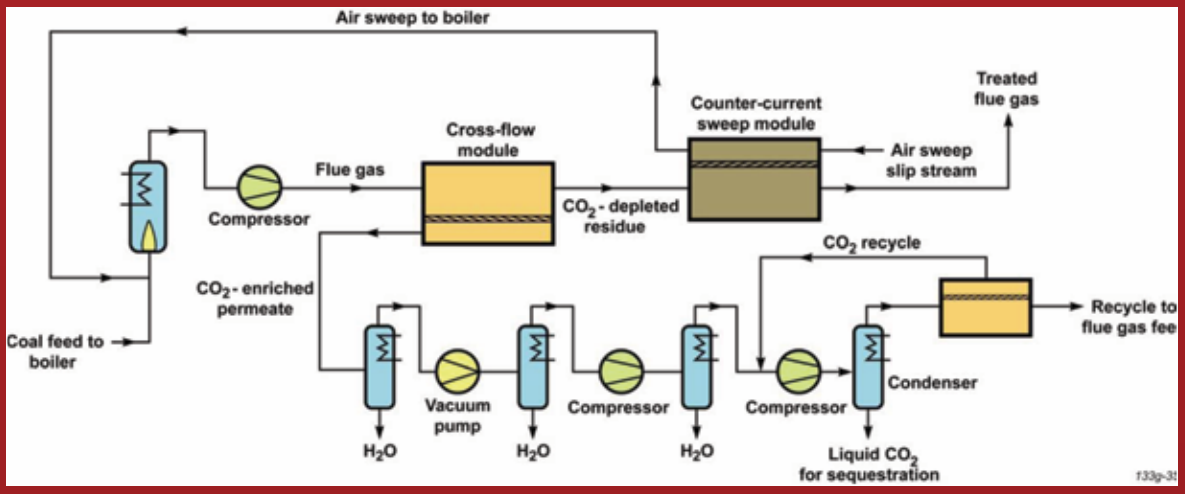

Table 2-3. Oxy-Combustion Technology Advantages and Challenges

CO_2 Capture Technology	Advantages	Challenges
Oxy-Combustion	• The combustion products are CO_2 and water. The relatively pure CO_2 is easily separated thus making the sequestration process less expensive.	• Current cryogenic air separation plants to produce O_2 are expensive (capital and operating) and energy intensive. • High cost of CO_2 recycle. • Develop processes to convert existing air-fired furnaces to oxygen fired. • High temperatures can degrade boiler materials. • Requires high temperature materials in new construction. • Boiler and process air leakage. • Excess flue gas constituents contaminating sequestration stream (O_2, SO_2, NO_x, Hg).

this pathway are conducting laboratory- through pilot-scale research into oxy-combustion boiler characteristics and innovative oxy-burner design. Although oxy-combustion would produce a flue gas that has a high CO_2 concentration, the flue gas will also include H_2O, excess O_2, N_2, SO_2, NO_x, mercury (Hg), and other contaminants. Therefore, other projects in this pathway focus on the development of flue gas purification technologies. Table 2-3 provides a summary of the advantages and challenges for oxy-combustion.

NETL's ORD is developing computational fluid dynamic (CFD) modeling tools for optimizing the design of oxy-combustion systems. The models will enable ORD to analyze new and retrofit oxy-combustion plants, to predict performance, and to recommend measures to improve performance. To verify model performance, ORD is utilizing a laboratory-scale burner suitable to study basic features of oxy-combustion.

For oxy-combustion and IGCC to be cost-effective power generation options, a low-cost supply of pure O_2 is required. Although a cryogenic ASU can be used to supply high-purity O_2 to the boiler or gasifier, this commercially available technology is both capital and energy intensive. Several novel O_2 production technologies currently under development have the potential to reduce the cost of O_2 production including Air Products' ion transport membrane (ITM) and Praxair's OTM.

Oxy-Combustion R&D Project Highlight

Oxy-Combustion Boiler Development

Alstom Power is developing oxy-combustion technology for retrofitting existing tangentially fired boilers. The project includes evaluating the performance of oxy-combustion in pilot-scale tests at their 5 MWe equivalent boiler simulation facility (BSF). The pilot-scale testing includes evaluation of the following variables: three coal types (bituminous, sub-bituminous, and lignite); flue gas recycle at different rates; oxygen injection flow rates and locations; windbox design; and over-fire air compartment design.

4. Chemical Looping Combustion

CLC is an advanced coal oxy-combustion technology that involves the use of a metal oxide or other compound as an O_2 carrier to transfer O_2 from the combustion air to the fuel, avoiding direct contact between fuel and combustion air. Figure 2-14 presents a simplified process schematic for chemical looping. The products of combustion (CO_2 and H_2O) are kept separate from the rest of the flue gases. Chemical looping splits combustion into separate oxidation and reduction reactions. In one potential configuration, chemical looping is carried out in two fluidized beds. The metal oxide releases the O_2 in a reducing atmosphere and the O_2 reacts with the fuel. The metal is then recycled back to the oxidation chamber where the metal is regenerated by contact with air. Researchers are investigating several metal oxides for use as the O_2 carrier including iron, nickel, copper, and manganese. For example, NETL's ORD is conducting laboratory R&D using nickel oxide on bentonite and copper oxide on bentonite as O_2 carriers. The advantage of using the CLC process is that the CO_2 is concentrated once the H_2O is removed and not diluted with N_2 gas. Another advantage of the CLC process is that no separate ASU is required and CO_2 separation takes place during combustion.

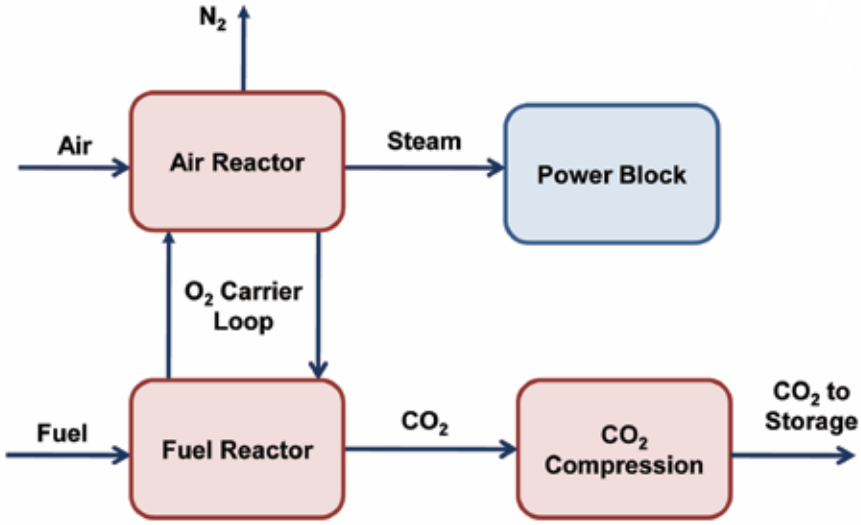

Figure 2-14. Chemical Looping Process

A related area of research is chemical looping gasification (CLG). In this system, two or three solid particle loops are utilized to provide the O_2 for gasification and to capture CO_2. A loop, similar to that of CLC, is used to gasify the coal and produce syngas (H_2 and CO). A second solid loop is used in a WGS reactor. In this reactor, steam reacts with CO and converts it to H_2 and CO_2. The circulating solid absorbs the CO_2, thereby providing a greater driving force for the WGS reaction. The CO_2 is then released in a calcination step that produces nearly pure CO_2 for further compression and sequestration.

Both CLC and CLG are in varying stages of process development from laboratory-scale through a 1-MWe pilot-scale for the CLC process. Projects in this pathway are advancing the development of chemical looping systems by addressing key issues, such as solids handling and O_2 carrier capacity, reactivity, and attrition. Table 2-4 provides a summary of the advantages and challenges for chemical looping.

H. CO_2 Compression

The CO_2 captured from a power plant will need to be compressed from near atmospheric pressure to a pressure between 1,500 and 2,200 psia in order to be transported via pipeline and then injected into an underground storage site. The compression of CO_2 represents a potentially large auxiliary power load on the overall power plant system. For example, in an August 2007 study conducted for NETL, CO_2 compression was accomplished using a six-stage centrifugal compressor with inter-stage cooling that required an auxiliary load of approximately 7.5 percent of the gross power output of a subcritical pressure, coal-fired power plant. The capital cost for the compressor and associated equipment is also significant.

To reduce auxiliary power requirements and capital cost, DOE/NETL is developing novel concepts for large-scale CO_2 compression. Various compression concepts are being evaluated using CFDs and laboratory testing, leading to prototype development and field testing. Research efforts include development of intra-stage versus inter-stage cooling; fundamental thermodynamic studies to determine whether compression in a liquid or gaseous state is more cost-effective; and development of a novel method of compression based on supersonic shock wave technology.

1. CO_2 Properties and Compression

After the gaseous CO_2 is captured, it must be compressed from the process discharge pressure (typically near atmospheric pres-

Table 2-4. Chemical Looping Technology Advantages and Challenges

CO_2 Capture Technology	Advantages	Challenges
Chemical Looping	• CO_2 and H_2O kept separate from the rest of the flue gases. • ASU is not required and CO_2 separation takes place during combustion.	• Efficient ash separation. • Attrition-resistant metal oxide carriers required during multiple cycles. • Autothermal heat integration.

sure) up to the required pipeline transport pressure (~2,200 psia), at which point the CO_2 is either in a liquid or supercritical phase, depending on its temperature. (Note: The supercritical phase refers to a pressure state above the supercritical point, where the CO_2 acts as neither a gas nor liquid.) Therefore, the CO_2 undergoes a phase transition somewhere between these pressures. Although a compressor is required to boost the pressure of the gas phase CO_2, a pump can be used to further boost pressure for the liquid or "supercritical" phase CO_2. The transition pressure for switching from a compressor to a pump is the critical pressure of CO_2, which is approximately 1,070 psia, at 88 °F. Therefore, a compressor can be used to boost the CO_2 to its critical pressure and then a pump can be used to achieve the required pipeline transport pressure. This is important, because it requires significantly less power to pump the liquid CO_2 (compression ratio of ~2) than it does to compress the CO_2 gas (compression ratio ~70).

2. Novel Concepts for CO_2 Compression

Researchers at the Southwest Research Institute are developing efficient and cost-effective compression systems to reduce the overall cost of CO_2 capture and storage for coal-based power plants. Two novel concepts have been studied that have the potential to reduce CO_2 compression power requirements by 35 percent compared to conventional compressor designs. The first concept is a semi-isothermal compression process where the CO_2 is continually cooled using an internal cooling jacket (intra-stage cooling), rather than using conventional inter-stage cooling. This concept can potentially reduce power requirements because less energy is required to boost the pressure of a cool gas. The second concept involves the use of refrigeration to liquefy the CO_2 so that its pressure can be increased using a cryogenic pump, rather than a compressor. The primary power requirements are the initial compression required to boost the CO_2 to approximately 250 psia and the refrigeration power required to reduce the CO_2 temperature to -25 °F and liquefy the gaseous CO_2. Once the CO_2 is liquefied, the pumping power to boost the pressure to pipeline supply pressure is minimal. Prototype testing of each concept is being conducted.

3. Supersonic Shock Wave Compression Technology

Ramgen Power Systems is developing a supersonic shock wave compression technology, similar in concept to an aircraft's ramjet engine, for use in a stationary compressor. The compressor design, known as a Rampressor, features a rotating disk that operates at high peripheral speeds to generate shock waves that compress the CO_2. Compared to conventional compressor technologies, shock compression offers several potential advantages: high compression efficiency; high single-stage compression ratios; opportunity for waste heat recovery; and low capital cost. For example, shock compression has the potential to develop compression ratios from 2.0 to 15.0 per stage with an associated adiabatic efficiency of 85 to 90 percent. For CO_2 applications, it is anticipated to use a nominal two-stage 100:1 compression ratio, featuring a matched pair of 10:1 compression stages with an intercooler located between the stages.

Prototype Rotor for Ramjet Compressor

I. Pilot-Scale Development – the National Carbon Capture Center

Power Systems Development Facility

DOE/NETL and Southern Company are responding to the need for developing cost-effective CO_2 capture technology for coal-based power generation with the addition of the NCCC at the Power Systems Development Facility (PSDF). The PSDF is an engineering-scale demonstration site for advanced power system components located adjacent to Alabama Power's coal-fired Plant Gaston in Wilsonville, Alabama. The PSDF is a unique test facility—large enough to produce commercially representative data from the major components required for a commercial plant—while remaining small enough for economic operation. The mission of the PSDF-NCCC is to develop technologies that will lead to the commercialization of cost-effective, advanced coal-based power plants with CO_2 capture. The PSDF-NCCC can test multiple projects in parallel with a wide range of test equipment sizes leading up to pre-commercial equipment sufficient to guide the design of full commercial-scale power plants. The PSDF-NCCC is capable of testing pre-, post-, and oxy-combustion technologies.

The backbone of the pre-combustion CO_2 capture technology development is a high-pressure flexible facility designed to test an array of solvents and contactors (Figure 2-15). Slipstreams are available with a range of gas flow rates and process conditions using coal-derived syngas for verification and scale up of fundamental RD&D capture projects. Carbon dioxide capture

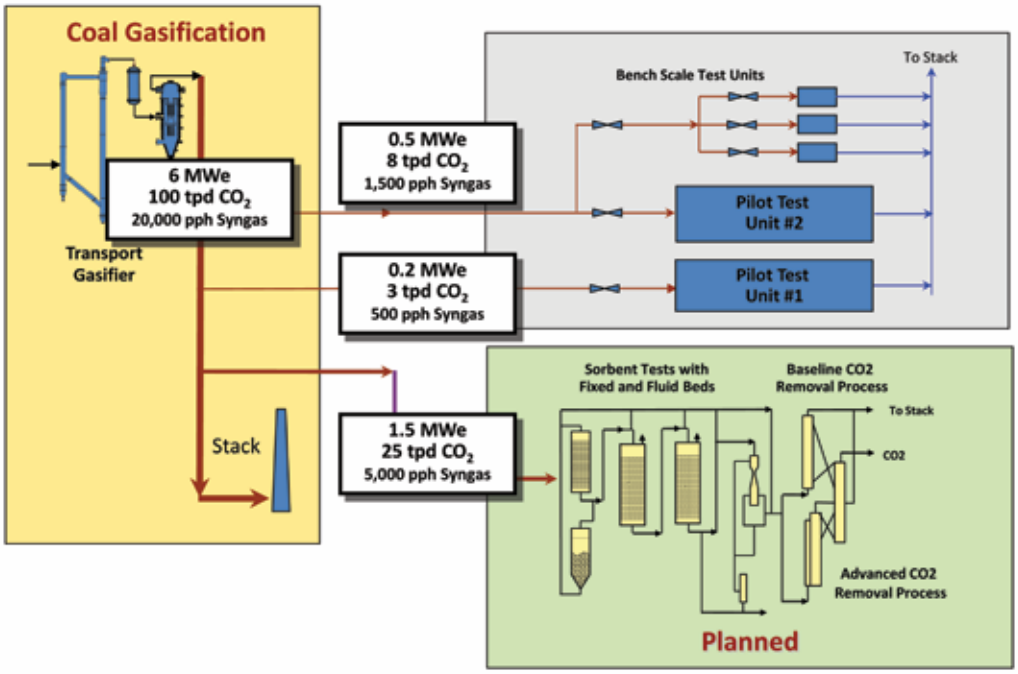

Figure 2-15. NCCC Pre-combustion CO_2 Capture Slipstream Test Units

technologies under consideration for slipstream testing include advanced solvent, sorbents, and membranes.

Plant Gaston provides the flue gas slipstream for the NCCC post-combustion CO_2 capture test facility. This flexible test module provides a site for testing technologies at a wide-range of sizes and process conditions on coal-derived flue gas. The PSDF-NCCC provides several parallel paths in order to test the candidate processes at the appropriate scale (Figure 2-16). For RD&D projects that have been successfully tested at bench-scale in a research lab, the PSDF-NCCC can provide a 1,000 lb/hr flue gas slipstream for screening tests. For technologies that have been successfully tested at the screening-scale, the PSDF-NCCC provides a flue gas stream for pilot-scale testing. Two pilot test beds have been designed, a 5,000 lb/hr (0.5-MW equivalent) slipstream and a 10,000 lb/hr (1.0-MW equivalent) slipstream. Advanced solvents, sorbents, and emerging technologies can be tested in the post-combustion module.

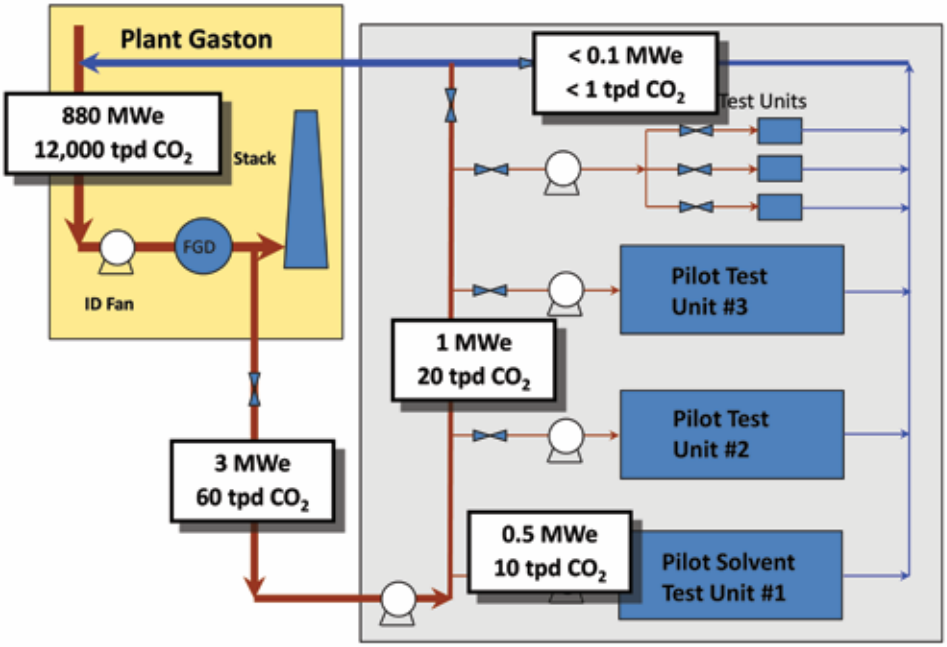

Figure 2-16. NCCC Post-Combustion CO_2 Capture Slipstream Test Units

J. Other DOE/NETL CO_2 Capture Activities

1. DOE/NETL Systems Analyses

The CO_2 capture RD&D activity relies on OPPA to perform technical and economic assessments. The results of these studies help direct and identify gaps for future RD&D efforts. Using integrated models and analysis, DOE/NETL is able to evaluate the interactions and dynamics of changes to the technology/performance of subsystems in the complex power generation plant, capture facility, CO_2 transportation, and storage segments of the overall power generation/carbon sequestration process. These tools allow an evaluation of the impacts on overall technical and economic performance, as well as the impact on associated subsystems of the power plant.

The results of these analyses provide critical feedback and guidance on potential technical issues that future RD&D activities should address to meet the goals and targets. Because many of the CO_2 capture RD&D activities are at the laboratory- through pilot-scale, systems analyses offer an opportunity to evaluate how these capture systems might be integrated on a commercial scale into existing plants as well as new power generation and industrial systems.

Systems analysis has a second and equally important task to help in the development of the performance targets to measure progress of the CO_2 capture research projects. Recent studies by DOE/NETL can act as a consistent baseline for measuring progress against energy and cost savings goals by new technologies and advances in existing technologies.

2. Carbon Capture Simulation Initiative (CCSI)

In 2010 DOE/NETL established the CCSI multi-laboratory partnership for accelerating the commercialization of CO_2 capture technologies from discovery to development, demonstration, and widespread deployment. CCSI brings together the best modeling capabilities at NETL, LANL, LBNL, LLNL, and PNNL in partnership with several academic and industrial institutions to develop a comprehensive, integrated suite of validated computational models for CO_2 capture technologies. Industry involvement is a key component of this initiative so as to ensure that the computational tools being developed are both effective and useful for the end customers. The scientific underpinnings of the suite of models will ensure that the learning from both successive generations of technology and competing technologies is maximized. The increased confidence in simulated designs obtained through this initiative will reduce the risk when incorporating multiple innovative technologies in a single new design, thereby accelerating the development cycle for bringing novel technologies to commercialization.

CCSI will develop a "Virtual Power Plant" modeling toolkit with CO_2 capture capability for PC power plant and industrial CO_2 sources that will provide the following benefits:

- Accelerates the path from discovery to commercialization.
- Rapidly prototypes new and optimized designs with a high level of confidence.
- Provides a uniform platform for evaluating technical options.
- Assesses and mitigates the technical and business risks of deployment.

CCSI will develop the Virtual Power Plant toolkit to initially address post-combustion capture with solid sorbents (Case Study A). The toolkit will be designed such that it can be extended to solvent-based capture (Case Study B) and oxy-combustion (Case Study C). The toolkit will be an integrated device and plant-scale model, which is validated and includes uncertainty quantification, optimization, and risk analysis capabilities. The toolkit can be used by power plant operators to evaluate technical risk of scale up and equipment manufacturers for technology development. One example application of the toolkit will be to use data from small- and large-scale field testing of PC post-combustion CO_2 capture and assess and mitigate the technical and business risks of deploying second generation technology demonstrations by industry.

3. University of North Dakota's Energy & Environmental Research Center (UNDEERC)

DOE/NETL has been collaborating with UNDEERC on CO_2 capture RD&D. In one project, UNDEERC researchers are incorporating a CO_2 sorbent into an H_2 production system in order to enhance the WGS reaction. Testing involves gasifying coal in a bench-scale continuous fluid-bed reactor and contacting the syngas with pre- and post-shift catalyst sorbent beds for CO_2 removal. This project also includes an examination of available membranes for H_2 and CO_2 separation in coal-derived syngas. In another project, UNDEERC researchers will determine the effectiveness of solid adsorbents through the use of a recirculating transport reactor. UNDEERC will also perform pilot-scale tests to demonstrate CO_2 capture technologies, such as solvent scrubbing and oxy-combustion, for fossil fuel and/or biomass-fired energy plants. Further, UNDEERC researchers will fabricate a scrubber system to conduct solvent scrubbing RD&D, modify existing pilot-scale units to conduct oxy-combustion tests, and perform system engineering studies to examine efficient and cost-effective integration of CO_2 capture technologies in existing and new power production systems.

4. CANMET Energy Technology Center

DOE/NETL also provides funding for the Canadian government's CANMET Energy Technology Center through an international agreement with the IEA Greenhouse Gas Program. The CANMET CO_2 Consortium is conducting research to further the development of oxy-combustion for retrofit to coal-fired power plants. Research activities include: (1) modeling of an advanced, supercritical pressure oxy-coal plant that includes an analysis of the impact of O_2 purity and O_2 partial enrichment, overall process performance, and cost; (2) performance testing of pilot-scale CO_2 capture and compression; (3) experimental investigation of CO_2 phase change at liquid and supercritical states in gas mixtures resulting from oxy-combustion; (4) testing and performance optimization of a novel, multi-function oxy-fuel/steam burner; and (5) development of a mercury removal process and analysis of multi-pollutant control strategies for oxy-combustion power plants

THIS PAGE INTENTIONALLY LEFT BLANK

CHAPTER 3: CO_2 TRANSPORTATION AND STORAGE

A. CO_2 Transportation

For most CCS applications, after the CO_2 is captured and compressed, it needs to be transported to a suitable geological storage site. Due to the large volumes of CO_2, transportation will likely be accomplished via pipeline rather than ground transportation. These pipelines will have potential impacts on numerous stakeholders, including land owners whose property will be crossed by pipelines, nearby residents, pipeline companies, owners of storage sites, power plants, environmental groups, and others who might be interested in a pipeline up to hundreds of miles long and carrying a pressurized/supercritical liquid. DOE/NETL has been investigating the challenges and benefits associated with the building of a national CO_2 pipeline network, including developing models to map pipeline scenarios so that cost estimates and regional differences can be identified and stakeholders can have an illustrative blueprint for future decades. Figure 3-1 summarizes critical challenges associated with CO_2 transportation and the research and technology implementation pathways addressing those challenges.

Figure 3-2 shows the location of electric generating sources and potential storage sites across the United States. In some cases, a power plant's location could be in close proximity to potential storage fields, simplifying the delivery of CO_2 to the final storage destination. However, in other cases, the capture and storage sites are located hundreds of miles apart, perhaps crossing one or more state borders. In those circumstances, a pipeline infrastructure is needed. Figure 3-3 presents a cumulative distribution plot of the distance to potential storage sites or existing CO_2 pipelines for the existing fleet of U.S. coal-based power plants based on an analysis performed by DOE/NETL.[9]

CO_2 TRANSPORTATION

Research and Technology Implementation Pathways

- CO_2 Pipeline Study
- Pipeline scenario modeling
- Facilitate communication between industry, academia, and government
- Impacts on materials from mixed gas streams

Challenges

- Public Perception
- Regulatory uncertainty
- Uncertain CO_2 demand and price-economic feasibility
- Liability risks
- Large-scale integration of pipeline network
- Corrosion resistant alloys and coatings

Figure 3-1. CO_2 Transportation Pathways and Challenges

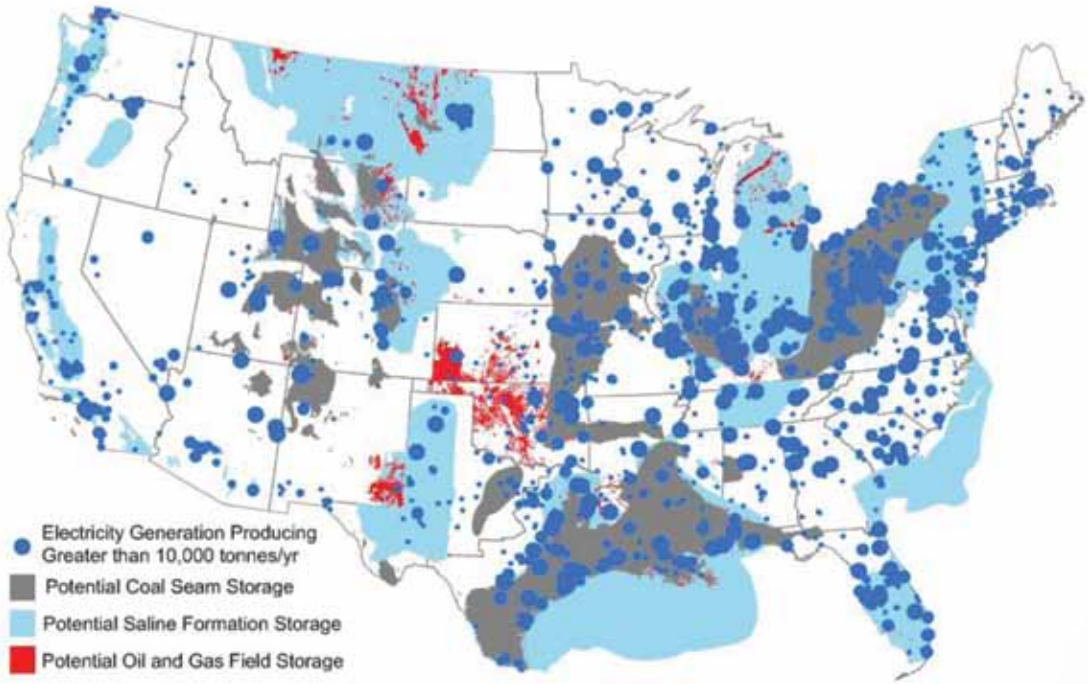

Figure 3-2. Current Power Plants and Potential CO_2 Storage Sites

As seen in Figure 3-4, a somewhat geographically limited CO_2 pipeline network already exists in the United States to provide a supply of CO_2 for EOR. This infrastructure has been built starting in 1973 and currently includes more than 3,700 miles of pipe moving 45 million metric tons of CO_2 each year. This is approximately equal to the volume of CO_2 emitted by 10 to 15 medium-sized coal-fired power plants. It was not built with CCS in mind, but because CO_2 is a valuable commodity used by the petroleum industry to revive mature oil wells. EOR can serve a dual purpose of increasing oil production and permanently storing CO_2 for climate change mitigation. Although this extensive pipeline network currently exists to serve the oil industry, in the future it could be expanded to include pipelines dedicated to CCS.

The design, permitting, construction, and operation of CO_2 pipelines are comparable to natural gas pipelines because they both transport a pressurized gas and utilize a similar carbon steel pipe design. Because of these similarities, statistics such as material costs, labor costs, and difficulties in obtaining rights-of-way can be compared and used to anticipate future costs and challenges. However, there are differences between CO_2 and natural gas pipelines including: CO_2 is transported at higher pressures, thus requiring thicker and, therefore, more expensive pipe and welds; CO_2 is piped as a liquid-like supercritical fluid, which utilizes pumps instead of compressors; there are different requirements for pipeline crack arrestors due to embrittlement of materials and to reduce impacts from leaks; and the chemical difference between CO_2 and natural gas require different materials for joints and seals.

The future annual quantity of CO_2 that will be captured and require transport and storage in the United States is uncertain at this time since it depends on the timing and stringency of future regulatory requirements, as well as the cost-effectiveness of CCS relative to other compliance options. According to studies of recently proposed Federal legislation (the American Clean Energy Security Act and the American Power Act), EPA estimates that about 30 percent of fossil-fuel-based electricity generation to come from power plants with CCS by 2040, rising to approximately 59 percent by 2050.[1] That equivalent quantity of CO_2 would be substantially larger than what has been transported annually for EOR and perhaps result in far greater numbers of pipelines crossing state boundaries. This could require the promulgation of new codes and regulations, greatly expanded construction of CO_2 pipelines, and the proper regulatory classification of CO_2 in order to safely, efficiently, and economically transport CO_2 from power plants and industrial sources to permanent storage sites.

Some business models predict a national network of pipelines while others argue that a one-to-one source-to-sink model will be adequate for several decades of CCS deployment. If a national network is to evolve, it is expected to be constructed in stages reflecting a gradual transition from market-driven pipelines built solely for EOR, to pipelines with a mix of EOR and saline storage driven by CO_2 emissions control regulation/legislation. The oil industry will likely continue to build CO_2 pipelines, whether climate change legislation is passed or not, due to the profitability of EOR. Early adopters of CCS will probably continue to focus on EOR opportunities for storage.

The evolution of the CO_2 pipeline network will be impacted by a number of factors that will influence pipeline locations, capacities, and costs. Whether pipelines are designated as "common carriers" (open access to all users under equal requirements) or "contract carriers" (transportation provided to shippers who enter into contracts with the pipeline operator), future government regulations could significantly impact the shape of the network. Under current regulations, the most important fact that distinguishes CO_2 pipelines from other pipelines is that CO_2 is considered a hazardous liquid, which dictates the pipe specifications and maintenance schedules. Future legislation could change the current framework concerning pipeline siting, transport fees, and rights-of-way acquisitions. This could move from being a state-governed process to one that involves Federal regulatory bodies.

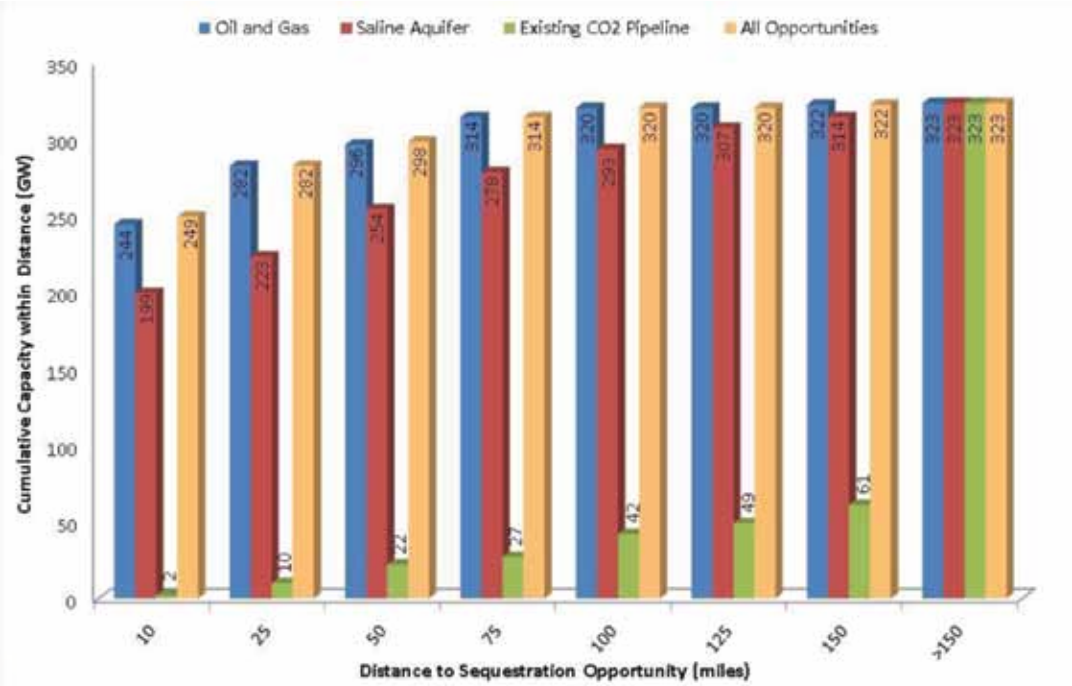

Figure 3-3. Distance to Storage Sites or CO_2 Pipelines for U.S. Coal-Based Power Plants

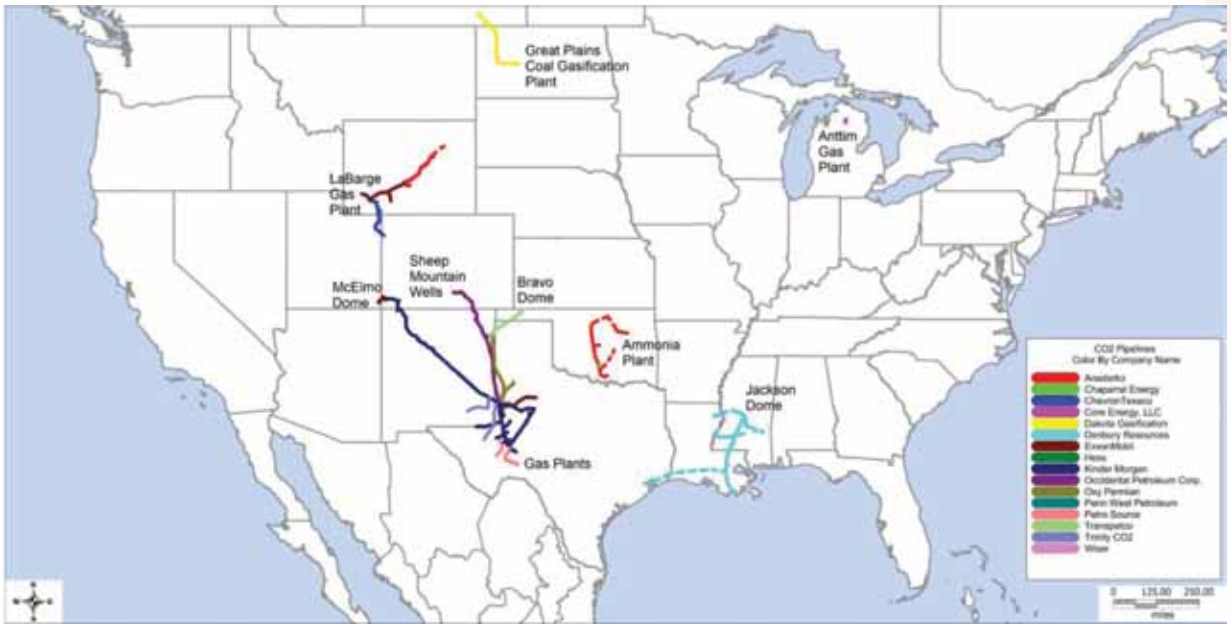

Figure 3-4. Current CO_2 Pipelines in the United States

DOE/NETL is also conducting regional case studies to determine theoretical pipeline routes that could develop to efficiently transport CO_2 from stationary sources to the nearby viable geologic storage sites. The implications of economics, resources, and timing of pipeline development are being evaluated to determine overall pipeline costs. These studies will provide insight into possible future pipeline development scenarios based on current economic and policy trends. They will provide groundwork for better estimates of the impacts and costs associated with a nationwide pipeline network that can be utilized by interested parties such as government entities, CO_2 emitters, pipeline companies, and policymakers.

B. CO_2 Storage

Once CO_2 is captured, compressed, and transported to a suitable site, the next step in a CCS project involves storage, wherein a suitable geologic storage site for the CO_2 is identified and the CO_2 is then injected as a supercritical fluid into deep, under-

STORAGE

Geologic Carbon Storage	Monitoring, Verification and Accounting (MVA)	Simulation and Risk Assessment	Regional Carbon Sequestration Partnerships
RESEARCH AND TECHNOLOGY IMPLEMENTATION PATHWAYS			
• Improved Fundamental Understanding • Technology Development	• Atmospheric and remote sensing • Near-Surface monitoring • Wellbore monitoring • Deep subsurface monitoring • Accounting protocols • Technology Development	• Mathematical Models Development/ Verification • Improved Risk Assessment protocols	• Characterization phase • Validation phase • Development phase • Education and Outreach
CRITICAL CHALLENGES			
• Development of robust, flexible accounting protocols • Intelligent monitoring networks • Develop robust risk assessment process models	• Develop mitigation options for identified risks • Develop Best Practices • Effective public education and outreach	• Optimize well design, well management, and well integrity • Maximize CO_2 injectivity and storage capacity • Long-term storage security	• Scale-up to commercial-size projects • Development of regulatory framework • Quantification/Verification of stored CO_2

Figure 3-5. CO_2 Storage Research and Technology Implementation Pathways and Critical Challenges

Table 3-1. Program Targets for Carbon Storage Technologies

Year	Targets for Carbon Storage RD&D Effort
2010	At least 1.0 million metric tons of CO2 cumulatively injected at large-volume field test sites since 2009.
2011	Complete a series of Best Practices Manuals from the lessons learned during the RCSP Validation Phase field tests and other geologic projects.
2013	Initiate large-scale storage project activities in high priority storage formations in the United States.
2014	Inject at least 6 MMT of CO2 into geologic storage formations.
2015	Develop MVA technologies that enable 99 percent of stored CO2 to be credited as net emissions reductions.
2015	Validate enhanced CO2 trapping and storage capacity at pre-commercial scale, and demonstrate the ability to predict CO2 storage capacity with plus or minus 30 percent accuracy.
2017	Update all Best Practice Manuals with the lessons learned from the core R&D, RCSP Development Phase, and other large-scale field projects.
2020	Produce Final Guidelines (Best Practices Manuals) based on post-injection monitoring of RCSP Projects.
2020	Demonstrate mitigation technologies for natural leakage pathways and existing wells.
2025	Test novel storage reservoirs such as ECBM, ESBM, and/or basalt at large scale that are capable of providing an economic benefit to offset storage costs or increase storage permanence through mineralization.

ground rock formations for permanent storage. Identifying a suitable storage site will commence with the start of the CCS project so that a suitable location within economic distance can be determined and baseline monitoring can occur prior to storage. Safe, underground geologic storage of CO_2 must be conducted through planning, analysis, sound operating practices, and careful monitoring of the CO_2, both during and after the period when CO_2 is injected. Ensuring that CO_2 storage is safe and effective will require site-specific quantitative risk assessment, which combines performance assessment of a storage site, coupled with an assessment of potential environmental, health, or economic consequences. DOE is leveraging the work of the RCSPs to determine the optimal approaches in each region of the country to carry out successful CCS projects, while working toward an integrated, nationwide CCS RD&D effort. Figure 3-5 summarizes critical challenges associated with CCS and the research and technology implementation pathways addressing those challenges.

Table 3-1 highlights the NETL RD&D program targets for carbon storage technologies. The goal of DOE research in the area of geologic carbon storage is to develop technologies to safely, permanently, and cost-effectively store CO_2 in geologic formations and monitor its movement and behavior. This involves developing an improved understanding of CO_2 flow and trapping mechanisms within the geologic formations that can support the development of improved and novel technologies for site construction, reservoir engineering, and well construction. Experience gained from field tests will facilitate the development of CCS best practices for site development, operations, and closure to ensure that CO_2 storage is secure and environmentally acceptable and does not impair the geologic integrity of underground formations.

1. Improved Fundamental Understanding

Advances in geologic carbon storage will depend upon a better understanding of the behavior of CO_2 in geologic formations. This includes improved knowledge of CO_2 trapping mechanisms, flow patterns, and interactions with formation rocks. Geologic CO_2 storage RD&D focuses on eleven geologic storage formation classes and two geologic seal classes which contain saline water and oil and gas. These formations include:

Storage Formation Classes

- Deltaic
- Shelf Clastic
- Shelf Carbonate
- Strandplain
- Reef
- Fluvial Deltaic
- Eolian
- Fluvial and Alluvial
- Turbidite
- Coal
- Basalt

Seal Classes

- Shale
- Evaporiates

Research efforts are investigating the effects of CO_2 injection on reservoir fluids, rocks, seals, and faults/fractures and achieving an improved understanding of caprock integrity. This knowledge will enable improved prediction of plume movement and the potential for permanent CO_2 storage through mineralization. Additional understanding is also required for the co-sequestration of CO_2 with H_2S, NO_x, SO_2, and O_2 that could allow storage of the entire effluent gas stream.

The pathways described below provide insight into the many technical issues which need to be better understood to enhance simulation models and monitoring tools to determine the fate of the CO_2, as well as to influence the design, operation, and closure of future geologic sequestration projects. Many of the areas described below have synergies which can be leveraged in the area of geologic carbon storage.

Interaction with and Impacts in Different Depositional Systems

When CO_2 is injected into a target formation, there could be immediate or long-term impacts and changes to the reservoir which could impact the ability to inject and store the CO_2. The 11 different classes of formations will be subject to geo-chemical changes and geo-mechanical stresses that could alter the ability to inject the CO_2. The oil and gas industry has decades of experience dealing with CO_2 impacts on gas production and EOR. Additional understanding will help to enhance CO_2 storage operations in the future.

Coal – An attractive option for storage of CO_2 is geologic sequestration in deep coal seams that have been deemed uneconomic to extract/mine in the foreseeable future. Coalbed methane (CBM) recovery is a rapidly growing source of domestic gas supply. With large internal surface areas, coal seams can store several times more CO_2 than the equivalent volume of a conventional gas formation. These formations have high potential for adsorbing CO_2 on coal surfaces while the displaced methane offers a valuable byproduct to reduce the overall cost of sequestration. One problem with CO_2 enhanced coalbed methane (ECBM), which hopefully can be overcome with further research, is the tendency for coal to swell in volume as it adsorbs CO_2, which in turn restricts the flow of CO_2 into the formation and impedes methane recovery. Further research is necessary to document the effects of CO_2 injection on changes to coal permeability and structure.

Basalt – Basalt is a hard, black volcanic rock and is the most common rock type in the Earth's crust (outer 10 to 50 kilometers). Most of the ocean floor is made of basalt. Large areas of lava called "flood basalts" are found on many continents throughout the world. A DOE-funded project at Pacific Northwest National Laboratory (PNNL) has shown that basalt formations can rapidly convert injected CO_2 to carbonate minerals (mineral trapping), beginning precipitation in a few months time and projected to complete conversion of fluid phase CO_2 to solid phase carbonate minerals in a hundred years or less, depending on depth of injection. Research is needed to understand the effects of mineralization on the formation and methods to increase injectivity.

Sandstone and Dolomites – Sandstone and dolomites comprise the two most common reservoir rocks for both hydrocarbon traps and saline formations and are therefore important to consider in terms of solubility trapping, hydrodynamic trapping, and mineral trapping. These systems develop differently depending where the materials were deposited in the depositional system. These different classes of sandstone and dolomites will influence how CO_2 will flow in the reservoir, whether the system is closed or open, geomechanical impacts, geochemical impacts, and whether hydrocarbons have accumulated in the systems.

Shale – Shale is a low permeability rock that impedes the upward migration of hydrocarbons and CO_2 and frequently serves as a caprock in structural and stratigraphic traps. Shale has many of the same adsorbtive qualities of coal. In some regions of the country shale is also a significant source of natural gas and hence could be used to store CO_2 using some of the same techniques used in coal seams. Furthering the understanding of the reaction of CO_2 and shale will help to validate these formations as seals and future sinks for CO_2.

Caprock – Caprocks are an essential geologic element of petroleum and/or CO_2 reservoirs. A caprock is a lithologic unit capable of impeding hydrocarbon or CO_2 movement upward, causing these buoyant fluids and gases to spread laterally, filling any stratigraphic or structural trap it encounters. Effective caprocks for liquid and gaseous accumulations are typically thick, laterally continuous, ductile rocks with high capillary entry pressures. The most common caprock lithologies over commercial petroleum reservoirs are evaporates and shales.

Interaction with Formation Fluids

Hydrocarbons – Injected CO_2 will usually encounter hydrocarbons and/or brine within the target formation, but it reacts differently to these two formation fluids. Carbon dioxide is injected into depleted oil and gas fields to improve hydrocarbon recovery. Because such formations are generally gas tight (i.e., where leakage of natural gas and other associated gases is negligible), the risk of CO_2 leakage is expected to be minimal.

When CO_2 is injected for EOR, it contacts oil that cannot be produced conventionally and causes it to swell and become less viscous. The reduced viscosity of the oil improves the flow of oil to the production wells. If the CO_2 used in EOR is eventually stored in the oil reservoir, EOR has the potential to become an environmentally attractive and economic option. The EOR industry has demonstrated that CO_2 can be injected successfully into depleted oil and gas reservoirs for more than three decades. Residual oil could also impede the movement of CO_2 in the storage formations once the pressure of injection operations have ceased, increasing storage permanence.

Brine – Because of the potential for CO_2 to dissolve in the aqueous phase (solution trapping), the storage capacity of deep saline formations is enhanced. However, CO_2 dissolves in water to produce weak carbonic acid followed by rapid dissociation of carbonic acid to form bicarbonate ions. Formation of Ca, Mg, and Fe (II) carbonates are expected to be the primary means by which CO_2 is immobilized. There are a large number of uncertainties associated with the heterogeneous reactions that may occur between CO_2, brine, and minerals in the surrounding strata, especially with respect to reaction kinetics.

Trapping Mechanisms

As shown in Figure 3-6, four types of trapping mechanisms control the storage density and leakage potential of the CO_2 injected into geologic sinks. These four trapping mechanisms include solubility trapping, hydrodynamic trapping, physical adsorption, and mineral trapping, and are described below. A better understating of these trapping mechanisms through laboratory and field experiments will help to design and implement future carbon sequestration projects that will safely and permanently store CO_2 for millennia.

In *solubility trapping*, the CO_2 simply dissolves in the formation water or reacts with the water to form carbonic acid and other aqueous carbonate species. The geologic sink for solubility trapping is a water-filled porous rock layer capped by an essentially impermeable rock layer (caprock). Just as a bottle of carbonated soda is actually slightly heavier than the same bottle filled with water, the salt water containing CO_2 is denser than the surround-

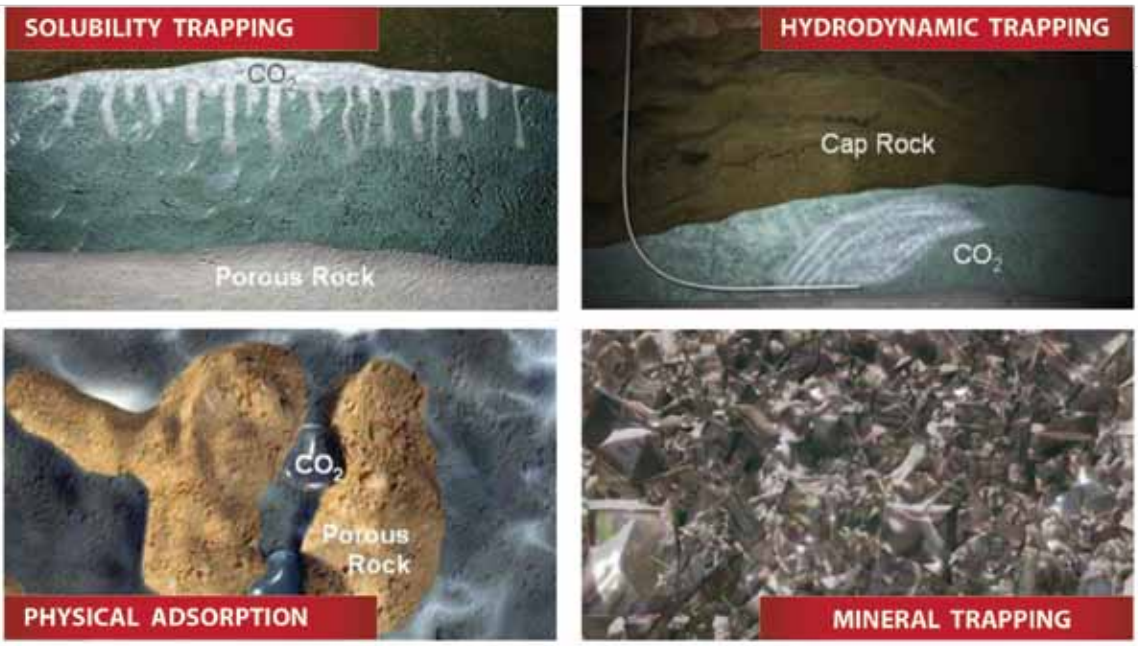

Figure 3-6. CO_2 Trapping Mechanisms

ing fluids. As a result, the salt water sinks to the bottom of the rock formation over time and traps the CO_2 even more securely. Solubility trapping also occurs during CO_2 flooding EOR. In this type of geologic sink, the injected CO_2 dissolves in the crude oil contained in the reservoir. The immobile, non-recoverable fraction of the crude oil is the geologic sink for the CO_2.

In *hydrodynamic trapping*, CO_2 occupies the pore space of the rock comprising the geologic sink. The geologic sink for hydrodynamic trapping is a porous rock layer capped by an essentially impermeable rock layer. Other terms that are sometimes used to describe this type of trapping mechanism are buoyant structural and stratigraphic trapping.

In *physical adsorption*, CO_2 molecules are immobilized or trapped at near liquid-like densities on micropore wall surfaces of coal organic matter, kerogen, or minerals. The hydrostatic pressure in the formation controls the gas adsorption process. Coal seams and shales are types of geologic sinks where physical adsorption trapping occurs.

In *mineral trapping*, the CO_2 dissolves in water to form a weak carbonic acid. Over a long time, however, dissolved CO_2 undergoes chemical reactions with silicate minerals rich in Ca, Mg, and Fe, resulting in the formation of a solid carbonate mineral phase. Sandstone formations rich in glauconite, illite, anorthite, chlorite, or smectite minerals and low in carbonates are the most favorable geologic sinks for mineral trapping of CO_2. This process can be rapid or very slow (depending on the chemistry of the rock and water in a specific storage site), but it effectively binds CO_2 to the rock. These trapping processes take place over many years at different rates, from a few days to years or thousands of years, but in general, geologically stored CO_2 becomes more securely trapped with time. Mineral trapping results in the most stable, permanent form of geologic CO_2 sequestration. Although the chemical reactions that generate the solid carbonate mineral phase are reversible, the kinetics of the reverse reactions are very slow.

Flow of CO_2 in Reservoirs

Carbon dioxide injection raises the fluid pressure near the injection well allowing CO_2 to enter the pore spaces initially occupied by the saline water, oil, or other fluids and gases within the formation. Once injected, the spread of CO_2 would be governed by the following primary flow, transport, and trapping mechanisms:

- Fluid flow (migration) in response to pressure gradients created by the injection process.
- Fluid flow (migration) in response to natural groundwater flow.
- Buoyancy caused by the density differences between CO_2 and the groundwater.
- Diffusion.
- Dispersion and fingering (localized channeling) caused by formation heterogeneities and mobility contrast between CO_2 and the groundwater.
- Dissolution into the formation groundwater or brine, thereby increasing the density of the brine which can cause convective mixing.
- Mineralization.
- Pore space (residual) trapping.
- Adsorption of CO_2 onto organic material.

The magnitude of the buoyancy forces that drive vertical flow depends on the type of fluid in the formation. When CO_2 is injected into a deep saline formation in a liquid or liquid-like supercritical dense phase, it is only somewhat miscible in water. Because supercritical CO_2 is much less viscous than water (by an order of magnitude or more), it would be more mobile and could migrate at a faster rate than the saline water in the formation. In saline formations the comparatively large density difference (30 to 50 percent) creates strong buoyancy forces that could drive CO_2 upwards.

Co-Sequestration

Natural gas processing from sour gas fields results in a CO_2 waste stream laden with H_2S. This acid gas is injected into deep saline formations and depleted oil or natural gas formations at 41 locations in Canada and at approximately 20 U.S. sites in Michigan, New Mexico, Oklahoma, Texas, and Wyoming. Co-sequestration of these gases could be appropriate for EOR operations or geologic sequestration in saline formations. In addition, IGCC power generation technology, which produces a combined CO_2/H_2S emission stream, could have the opportunity to co-sequester the CO_2 and H_2S stream without the additional step of removing the H_2S, thereby making the process more economical. Increased knowledge of the effects of co-contaminants such as H_2S and flue gas constituents will lead to a better understanding that will determine the impacts of the reservoir, seals, and infrastructure needed to develop a project site.

2. Technology Development

A second aspect involved with geologic carbon storage is technology development, which is the development of improved carbon storage techniques and processes to increase the effectiveness of carbon sequestration projects and the integrity of these projects to store CO_2. One possibility is improved well drilling and completion techniques to increase the rate of injection, perhaps through horizontal wells. Other aspects include improved materials to prevent corrosion and leakage in wellbores and other facilities and development of improved monitoring techniques, such as intelligent networks. Increased fundamental understanding should also lead to the development of improved mitigation techniques, such as how to handle leaks or unexpected plume behavior.

Improved Injection Well Construction and Drilling Practices

Improvements in well drilling and construction practices will follow the advances made by past DOE and industry programs in drilling and completing oil and gas wells. Some of these improvements include "measurement while drilling" methods adopted by several drilling companies to determine formation pressures, bit orientation, and other parameters. In addition, horizontal drilling can be used to increase the surface area contacted by the injection process, delivering greater volumes of injectant to the formation. Other technologies, such as underbalanced drilling, may not damage the target formation, thereby increasing the injection efficiency. Research is needed to test the feasibility of these and other industry and/or novel technologies to be applied to enhance carbon sequestration practices and projects.

Develop Mitigation Procedures to Address Potential CO_2 Leakage

Mitigation strategies will depend on the source, pathways, and the nature of the leak. There are currently several mitigation strategies available, and more are expected as a result of ongoing R&D. If a leak occurs through the injection well, measures can be taken to repair the well, such as re-cementing. If the leak occurs through a fracture in the caprock, measures such as pumping out the CO_2 to reduce the pressure in the reservoir can be used to prevent further leakage. Other options include forming a "pressure barrier" by increasing the pressure in the reservoir into which CO_2 is leaking or by intercepting the CO_2 leakage paths. Another strategy involves plugging the region where leakage is occurring with barrier (low permeability) materials. Additional research is necessary to improve and test the methods for mitigating any potential leaks.

Improved Materials

Advances in drilling and completion materials, such as specialized drilling muds, casing materials, and acid resistant cements, will lay the foundation for the design and construction of lasting injection wells. With the addition of CO_2, the pH of deep subsurface fluids is lowered, making them more aggressive to cements and casings. Additional research is underway to improve and develop new materials for this application.

C. Monitoring, Verification, and Accounting

MVA capabilities will be critical to ensuring the long-term viability of CCS – satisfying both technical and regulatory requirements. MVA efforts aim to track the amount of CO_2 stored at a specific sequestration site, monitor the site for leaks or other deterioration of storage integrity over time, and verify that the CO_2 is sustaining expected levels of permanence. Some of the critical challenges related to MVA include the quantification and verification of stored CO_2; development of robust, flexible accounting protocols; and reducing the cost of near-term and long-term monitoring.

MVA tools have advanced in application, sensitivity, and resolution over the last 10 years as both large- and small-scale demonstrations of geologic CO_2 sequestration have taken place. Large commercial operations—such as Sleipner in Norway, Weyburn in Canada, In Salah in Algeria, and efforts of the RCSPs in the United States—have resulted in the application and validation of monitoring tools from the Core R&D program that identify CO_2 in the target formation, overburden, at the surface, and in potential leakage pathways from the formation to the surface. The areas of research where the tools have been developed and improved are in atmospheric monitoring and remote sensing, near-surface monitoring, wellbore monitoring, and deep subsurface monitoring.

The goal of MVA research is to develop monitoring technologies that can be used in conjunction with verification and accounting protocols to provide a high level of confidence that injected CO_2 remains permanently stored. MVA tools and protocols also provide the capabilities to enable CO_2 credit trading, should a domestic program be established. The DOE goal for MVA is to achieve a level of accountability such that greater than 99 percent of injected CO_2 can be credited and contribute to the economic viability of a storage project. MVA techniques include atmospheric and remote sensing techniques, near-surface monitoring techniques, wellbore monitoring, deep subsurface monitoring, and accounting protocols.

1. Atmospheric and Remote Sensing

Atmospheric monitoring techniques play a vital role in identifying gas-phase CO_2 concentrations above ambient background levels and help to determine approximate locations of CO_2 leak-

age, in the unlikely event that it should occur. Carbon dioxide monitoring devices can be either point receptors, areal systems, or remote sensing platforms. These devices are capable of monitoring very low concentrations of CO_2 or tracers at a project site to indicate the presence of a leak. These systems can also be used to measure higher concentrations that may pose safety concerns. Systems such as CO_2 flux towers, open path monitoring systems, chemical tracer monitors, and satellite-based infrared and Interferometric Synthetic Aperture Radar (InSAR) systems can be used to measure leakage and/or determine movement of the CO_2 plume.

Atmospheric sensing of CO_2 plume seepage is difficult due to background CO_2 production through natural processes (respiration), as well as contributions from any anthropogenic sources (motor vehicles, factories, power plants) that may be in the area. Many of the atmospheric MVA tools are spatially limited and several sampling efforts are normally conducted in order to pinpoint areas of elevated CO_2 fluxes. Differentiating natural fluxes from anthropogenic emissions can be achieved through the use of CO_2 tracers such as isotopes and noble gases.

2. Near-Surface Monitoring

Near-surface monitoring techniques play an important role in the protection of shallow groundwater sources and supply critical information on any major vertical migration of injected CO_2. Near-surface monitoring techniques can detect CO_2 migration into groundwater aquifers or the displacement and migration of brine into freshwater aquifers, as well as measure soil-gas CO_2 concentrations. These tools can be used to map changes in pH, alkalinity, and concentration of calcium or other alkaline earth metals from pre-injection, baseline conditions in order to understand the location and the consequences of CO_2 migration.

In the vadose zone, the local surface features including topography, meteorology (wind, rain, soil moisture content), sediment type (cobble versus clay), and vegetation (rooting zone) can impact the resolution of CO_2 plume quantification and differentiation between natural biologic production versus subsurface seepage.

3. Wellbore Monitoring

Wellbore monitoring is used to confirm the integrity of the wellbore and well-casing and ensure that there are no leakage pathways along or across any part of the well construction materials. Routine mechanical integrity tests are implemented as a mandatory requirement to ensure the well casing and annulus are intact and operating as planned. Wireline logging tools can be lowered into the well to assess the well structure and surrounding wellbore for any problems that may arise as a result of injection. Some wireline tools are even capable of characterizing site geology within the wellbore vicinity.

The major challenges associated with wellbore monitoring are identification of abandoned wells, determination of cement integrity and contiguity, identification of fractures or local stress in the wellbore, and determination of compromises due to local or induced (injected fluids) conditions.

4. Deep Subsurface Monitoring

Deep subsurface monitoring technologies are used to track the CO_2 plume and monitor injection well integrity, detect changes in subsurface chemistry, assess reservoir integrity, and validate seal rock integrity. Subsurface monitoring tools can effectively characterize specific geological site features, which can be used in reservoir modeling efforts. Subsurface modeling techniques play a vital role predicting CO_2 plume location, pressure propagation, and reservoir and seal integrity following injection.

In the deep subsurface, geophysical and geochemical tools can identify where a CO_2 plume is located but cannot quantify how much CO_2 is located within the plume. Seismic reflection, micro-gravity, acoustic sounding, in situ sensors (pressure, temperature, pH), solution chemistry, or novel tracers can determine the location of an injected CO_2 plume, but the mineralogy of the target formation and the solution chemistry of the pre-existing liquids (oil, brine) can confound the resolution of the MVA tools in the identification of a CO_2 plume. Therefore, multiple MVA tools are required to identify a CO_2 plume in the target reservoir, and multiple depths of analysis are required to differentiate the location of the CO_2 plume and to determine if the CO_2 is within or above the target reservoir. Carbon dioxide plume migration is being researched with higher spatial resolution tools, such as electric resistivity, surface potential, tiltmeters, micro-gravity, 2D and 3D seismic, and vertical seismic profiling. Further refinement of the technology application and interpretation of results is necessary to help track the plume and monitor leakage paths.

5. Accounting Protocols

Monitoring and measurement systems must provide data to assure project operators, regulators, the environmental community, and other stakeholders that storage projects are achieving and sustaining design levels of CO_2 storage permanence. The application of the various tools both spatially and temporally must be done systematically to adequately verify CO_2 storage and containment to meet environmental permitting requirements and to be credited in any future emissions trading market. Research is needed to develop protocols which demonstrate containment. Permanence of the CO_2 in the storage project can be derived from demonstrating that no leakage has occurred from a storage reservoir.

D. Simulation and Risk Assessment

Simulation models are critical for predicting the flow of the CO_2 in the target formation, chemical changes that may occur in the reservoir, and geomechanical effects that increased pressures might have on the target formation and seal(s). Improved models that can simulate faults/fractures, the subsurface behavior of system fluids, and geochemical/mechanical/flow effects are needed. Current efforts to refine and couple these models represent a primary emphasis for this focus area.

Another emphasis is risk assessment, which focuses on the development of effective risk assessment protocols and models that are flexible enough to be tailored to individual sequestration sites. A preliminary or qualitative risk assessment is often performed at the early stages of a project to help in site selection,

to assist in communicating project goals and procedures to the public, and to aid regulators in permitting for the project. After more complete site characterization and modeling have been performed, a more quantitative risk assessment can be conducted to evaluate specific risk to the environment, schedule, and project budget.

1. Mathematical Models Development/Verification

Simulation algorithms have shown extremely rapid advances over the past two decades, including very sophisticated gridding techniques and mathematical optimization methods. Presently, the main limitation in simulating subsurface carbon sequestration and its risks is lack of meaningful data that describe the physical properties at depths of several kilometers. While petroleum companies invest billions of dollars each year on such characterization efforts during oil exploration, a fundamental inability to characterize the subsurface with high resolution still exists. Computer simulation of sequestration can provide meaningful approaches for predicting CO_2 fate and quantifying potential risks. Three key areas of simulation—focusing on faults/fractures, subsurface behavior and fate of CO_2, and geochemical/mechanical/flow models—demonstrate how simulation technology is critical to sequestration evaluation and risk assessment.

Simulate Faults/Fractures

The most common approach today for evaluation of fluid flow in faults and fractures is the use of simulation models that mimic faults via simple "equivalent permeability" (e.g., assignment of higher or lower permeability in the faulted/fractured area of the model grid). Another common simulation method assigns "dual porosity" or "dual permeability." Such models contain two overlapping porous media—one for a permeable matrix and one for fractures or faults in an impermeable medium—along with fluid flows between the two media. However, dual porosity/permeability models are fundamentally limited, inasmuch as fracture networks are simplified as perfectly smooth (idealized) apertures. In the equivalent permeability and dual permeability approaches, effects or coupling of rock deformation on hydrologic properties and fluid flow are typically not included. During the past five years, however, significant advances in research of the coupling among fluid pressure, rock stress, and deformation have facilitated a new generation of modeling methods that are now being implemented for the risk assessment of RCSP field demonstrations. Now, it is more common to simulate and evaluate the fully coupled process (i.e., flow through faults and fractures and concomitant rock deformation induced by changes in fluid pressure). Researchers can estimate the possibility of leakage through an existing fault, as well as forecast potential risk of CO_2 injection causing new faults or fractures to form.

Subsurface Behavior and Fate of CO_2

In general, CO_2 injected in the deep subsurface for sequestration will be trapped by four primary mechanisms (described earlier), including solubility, hydrodynamic, physical adsorption, and mineral trapping. All CO_2 trapping mechanisms, however, have several failure modes. Major failure modes for hydrodynamic or hydrostratigraphic trapping include unintended migration, unintended lateral flow, very rare catastrophic events, and wellbore failure events. The primary failure mode for physical adsorption or residual gas trapping is loss of capillary forces (surface tension) of the pore matrix. The primary failure mode for dissolution in brine or solubility trapping is exsolution, which would only occur under significant or large changes in pressure or temperature. The primary failure mode for mineral trapping is dissolution of the carbonate minerals that trapped the CO_2.

Figure 3-7 details the critical parameters that are being evaluated in order to better quantify the risk of trapping failure. A comprehensive monitoring program at each of the DOE field project sites, complementing a broad laboratory testing program facilitated by the DOE NETL Core RD&D program, is identifying these critical parameters. Heterogeneity in natural systems with respect to all of these parameters leads to a great degree of uncertainty.

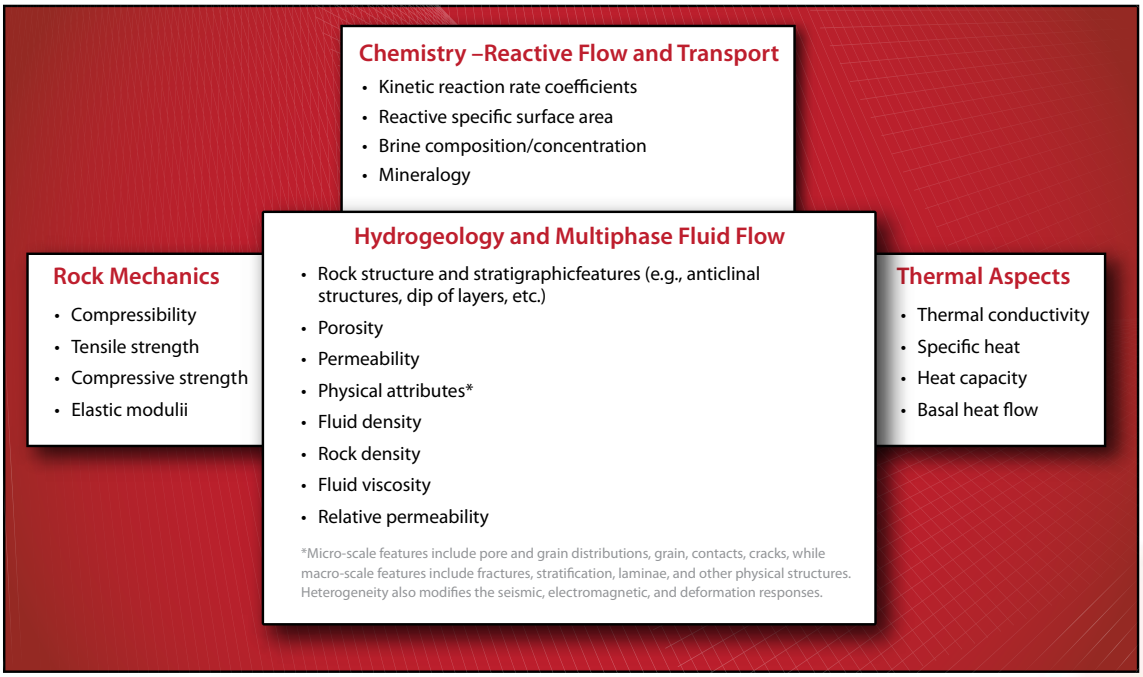

Figure 3-7. Critical Parameters for all Mechanisms of CO_2 Trapping

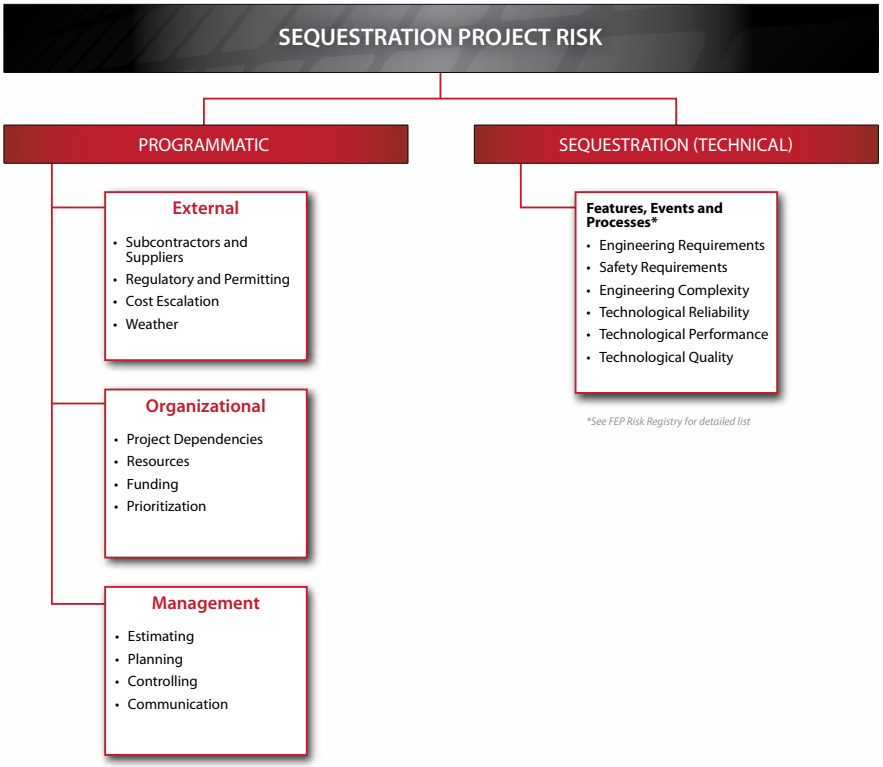

Figure 3-8. Risk Breakdown Structure for a Commercial-Scale Geologic Storage Project

Geochemical/Geomechanical/Flow Models

Until recently, it was not possible to simulate geochemical processes, geomechanical processes, and heat processes with fluid flow to evaluate how they affect and change each other, since a fully comprehensive simulator was not publicly available. During recent sequestration field experiments, however, a major emphasis on fully coupled simulation analyses has led to new fully coupled simulators. Such fully coupled model simulations will facilitate integrated risk assessment that accounts for all possible processes. Effective risk assessment requires knowledge of how each specific process might increase or reduce risk of other physically distinct processes. For example, short-term chemical reactions may increase or reduce rock strength, thus altering the risk of seal-layer deformation over time. Additionally, surface and downhole tiltmeters, as well as satellite InSAR data, are currently being used to monitor the pressure changes in subsurface formations. As coupled flow and geomechanical models improve, these measurements may be able to be used to detect potential deep subsurface leaks before any CO_2 migration occurs. Presently, multiphase flow models and geomechanical models are loosely coupled, and single-phase flow and geomechanical models have been coupled implicitly; however, the coupled flow modeling work in general is still in the early stages.

2. Improved Risk Assessment Protocols

Risk management plans generally include two primary aspects: (1) programmatic risks (including resource and management risks) that may inhibit project progress or costs, and (2) sequestration (technical) risks inherent to the scientific and engineering objectives of a sequestration project. Figure 3-8 details a breakdown of risk management into its component parts. Programmatic risk is a rather mature field and many different industries have significant experience in this area. The risk from the sequestration operations can be quantified from other analogs and the information from field Core RD&D projects.

For technical sequestration risks, one approach involves developing a framework of specific risk features, events, and processes (FEPs) that could contribute to or prevent CO_2 leakage. These FEPs, along with identified programmatic and safety risks, become what is called the "risk registry."

In addition to identification of potential "pathways" for leakage, equally important is the identification of specific consequences. For geologic sequestration, some consequences of concern include brine contamination of underground sources of drinking water (USDWs), unintended migration of CO_2 into petroleum resources or other infringement on mineral rights, and long-term CO_2 seepage into the atmosphere. Following identification of specific FEPs and the development of a risk registry for a specific site, a list of potential consequences must also be identified and associated with the FEPs.

A complete risk assessment program will typically involve assembling a working group of scientists, engineers, and administrators to track details of both programmatic and sequestration (technical) risks and to develop risk mitigation approaches in real-time during project execution.

E. Infrastructure—Regional Carbon Sequestration Partnerships and other Regional Projects

Ultimately, the implementation of large-volume storage tests and regional characterization efforts will serve to verify the best technologies to use in future application of CCS systems in the United States and Canada. Additionally, these large-volume injection projects are necessary to validate integrated storage with capture systems and validate storage in many different classes of storage formations, including different depositional environments, low permeability reservoirs, coal seams, shale, and basalt. Although policy and regulatory frameworks continue to evolve that will allow the United States to achieve an environment for the successful development of CCS infrastructure and systems, technology development must continue. DOE's fundamental mechanism for achieving future implementation of these large-volume tests lies with regional projects through the RCSPs and other large-volume injection projects and characterization efforts.

The United States is a vast and diverse Nation, with variations in topography, geology, climate, population density, infrastructure, and socioeconomic development. With these variations in mind, DOE determined that the optimal approach for implementing a nationwide CCS RD&D effort should be on a regional basis. Thus, DOE formed the RCSPs, which were initiated in September 2003. Through an open and competitive solicitation, DOE awarded cooperative agreements to seven partnerships, each covering a specific region of the United States and Canada. Under this arrangement, the various partnerships could focus on the CCS opportunities within their specific region, while collectively building an effective and robust nationwide initiative.

The RCSPs are a public/private partnership that involves more than 400 organizations covering 43 States and four Canadian provinces. The partners include representatives from the agricultural industry, coal companies, national laboratories, oil and gas companies, regional universities and academic institutions, non-government organizations, state and local government organizations, foreign government agencies, engineering and research firms, electric utilities, and other industrial partners. The underlying premise of the RCSPs is the belief that local citizens, institutions, and organizations will contribute experience, expertise, and perspectives that best represent the concerns and desires of a given region, resulting in the development and application of technologies best suited to that region.

The RCSPs are tasked with characterizing CO_2 sources and potential sequestration sites in their regions and conducting CO_2 storage tests of technologies developed in the Carbon Sequestration Core RD&D Program. These tests will assist the RCSPs in determining the most suitable technologies, appropriate regulations, and required infrastructure for CCS in different areas of the country. The RCSPs have also evaluated terrestrial sequestration options in soils and organic material through the restoration of agricultural fields, grasslands, rangeland, wetland, and forests.

In FY 2008, DOE awarded projects to all seven RCSPs to develop large-scale storage projects in the most promising storage formations in their regions that will further continue the path forward to validate the technologies at large scale. Each project will inject at least 1 million tons of CO_2 over several years to validate the formation injectivity, capacity, and effectiveness to contain the CO_2. These large-volume projects will serve as the continuation of the field test program implemented by DOE through the RCSPs and help to provide lessons learned for the CCPI and FutureGen 2.0 Programs to demonstrate CCS technologies at scale.

A primary function of the RCSPs is to continue the characterization of the regional geology for adequate reservoirs to store CO2 and maintain regional digital atlases which are also available through the NATCARB system. Data reported in the 2010 Carbon Sequestration Atlas of the United States and Canada (Third Edition) and listed on the NATCARB website (www.natcarb.org) identified more than 4,500 stationary sources that generate close to 3.4 billion metric tons of CO2 annually. Aggregate CO2 sink capacity, including saline formations, oil and gas reservoirs, and unmineable coal seams, is estimated from 1,800 billion to more than 20,000 billion metric tons – enough to sequester CO2 emissions at current annual generation rates for hundreds of years for the United States and covered Canadian areas. The geologic formation maps in Figure 3-9 show the locations and potential storage capacity of these potential geologic storage sites. Storage capacities for basalts and hydrocarbon-rich shale are not included in this estimate because those formations have not been fully characterized.[2]

Partnership Descriptions

The summary descriptions below provide information for each of the RCSPs, including the types of CO_2 storage opportunities being evaluated in their respective regions.

The Big Sky Carbon Sequestration Partnership (BSCSP) region has extensive basalt formations, saline formations, deep coal seams, and depleted oil and gas reservoirs with significant storage potential for the estimated 119 million metric tons (131 short tons) of CO_2 emitted annually from this region. Geologic field projects are assisting this partnership to characterize and test mineral trapping mechanisms in order to determine the flow and migration of CO_2 in the reservoirs and predict its long-term fate. The projects are also helping to determine operational needs, permitting and regulatory requirements, monitoring requirements, and quantification of economic offset opportunities such as EOR and CBM production. BSCSP's terrestrial sequestration project efforts have demonstrated that rangeland, cropland, and forestland projects are an effective component of a GHG mitigation strategy.

The Midwest Geological Sequestration Consortium (MGSC) is assessing the technical and economic feasibility of geologic formations in the Illinois Basin to store CO_2 in coal seams, mature oil and gas reservoirs, and deep saline formations. Highly favorable storage areas exist in this region, given that two or more types of potential CO_2 storage formations are vertically stacked in some localities. MGSC is also developing MVA protocols, investigating CO_2 capture technologies for the region's stationary sources, determining the costs of transporting large quantities of CO_2 via pipeline, and conducting regional hydrologic studies to determine the effects of commercial development of CCS in the region.

The Midwest Regional Carbon Sequestration Partnership (MRCSP) region accounts for roughly 23 percent of U.S. emissions from stationary sources. MRCSP has a great potential for seques-

tration in deep geologic formations, including large areal extents of deep saline formations, depleted oil and gas reservoirs, and coal seams. Gaining a better understanding of the distribution of these formations across eight States and their ability to sequester CO_2 is a continuing focus of MRCSP's geologic research. MRCSP's terrestrial field tests to demonstrate soil carbon sequestration in cropland, degraded wetland and marshland, and reclaimed minelands have enabled the partnership to measure the impact of improved land management practices and increased their understanding of sequestration opportunities in the region.

The Plains CO_2 Reduction (PCOR) Partnership region, covering parts of both the United States and Canada, offers significant potential for sequestration in limestone, sandstone, coal seams, and depleted oil and gas reservoirs. PCOR has confirmed an enormous potential for carbon storage in strata suitable for EOR and estimates additional oil recovery through regional EOR applications of more than 1.4 billion barrels. Geologic field tests conducted by PCOR have established the multiple benefits of CO_2 storage with EOR, CO_2 storage with H_2S disposal and simultaneous EOR, and CO_2 storage with simultaneous ECBM extraction. PCOR's wetland restoration activities in the Prairie Pothole Region are providing the background information needed to determine carbon offsets, develop protocols and standards for land management practices, and provide a market-based CCS strategy for the future. PCOR is one of only two of the RCSPs which include Canadian provinces.

The Southeast Regional Carbon Sequestration Partnership (SECARB) estimates that 31 percent of the Nation's CO_2 stationary source emissions come from the States in the SECARB region, and the region's deep saline formations offer potential capacity for safe and permanent storage of those emissions. SECARB is working to characterize carbon sources and potential sequestration sites in the Southeast; identify the most promising capture, sequestration, and transport options; and address issues for technology deployment. SECARB has determined that the saline formations of the Gulf Coast and mature CBM reservoirs in the Appalachian and Black Warrior Basin are extensive and of regional significance as potential sinks for carbon sequestration.

The Southwest Regional Partnership on Carbon Sequestration (SWP) is leveraging 30 years of EOR experience in the region to determine the potential for saline formations, natural gas and depleted and marginal oil fields, and coal seams to store CO_2 emissions. SWP is exploring the option to utilize the CO_2 produced from natural CO_2 reservoirs with anthropogenic CO_2 from power plants for EOR and enhanced natural gas recovery (EGR) in the region. The existence of CO_2 pipelines that link CO_2 sources with potential CO_2 storage formations in the region makes the Southwest an optimal location for carbon sequestration.

The West Coast Regional Carbon Sequestration Partnership (WESTCARB), encompassing areas in both the United States and Canada, is examining the sequestration potential in depleted oil and gas reservoirs, coal seams, and deep saline formations. The region offers significant potential for sequestration in porous sediments greater than 2,500 feet deep, especially the saline formations of California's Central Valley, which have held oil and gas for millions of years. WESTCARB has also quantified the extent to which changes in the management of forests, rangelands, and agricultural lands could increase carbon storage by plants and soils.

The RCSP effort is being implemented in three phases, which include the characterization of CCS opportunities for each of the seven regions, followed by field tests to confirm and validate the regional sequestration opportunities, and was expanded to include large-scale field tests, as shown in Figure 3-10. The three phases are interrelated, with each subsequent phase augmenting and building upon the previous. This approach provides the RCSPs with invaluable CCS knowledge and operating experience, enabling accelerated confirmation of CO_2 storage viability.

1. Characterization Phase

Characterization Phase activities focused on identifying regional opportunities for CCS and were completed in FY 2005. The seven RCSPs catalogued regional CO_2 sources, characterized CCS prospects, and prioritized opportunities for future CO_2 injection field tests. Each RCSP developed decision support systems for comparing regional data on CO_2 sources with geologic information on potential CO_2 storage sites. These systems were used to rank source-site combinations.

During this phase, each RCSP also researched project tools necessary to model and measure the movement of CO_2 following

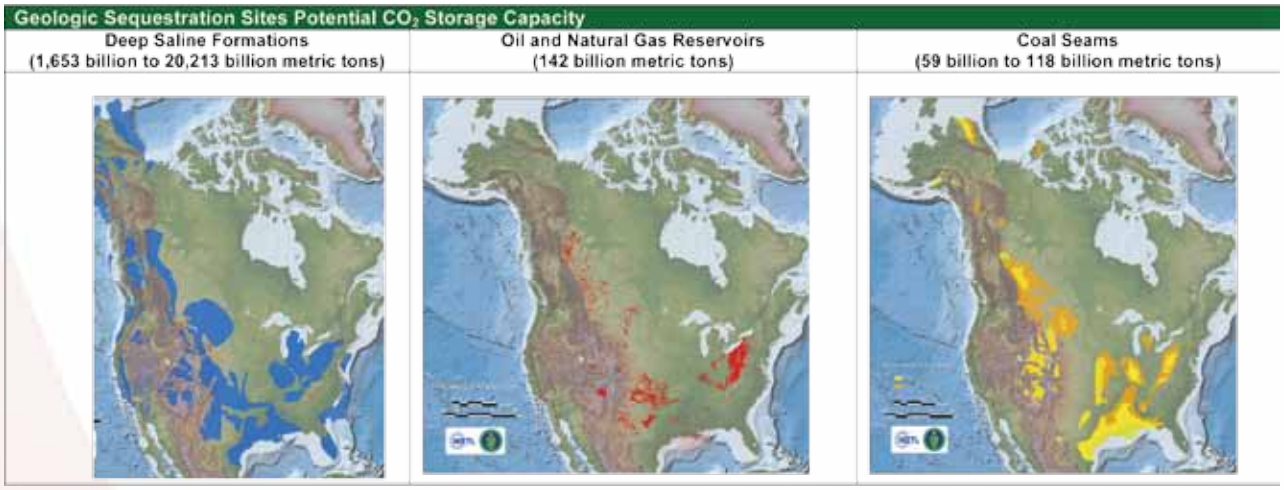

Figure 3-9. Estimates of CO_2 Storage Capacity for Geologic Sequestration Sites

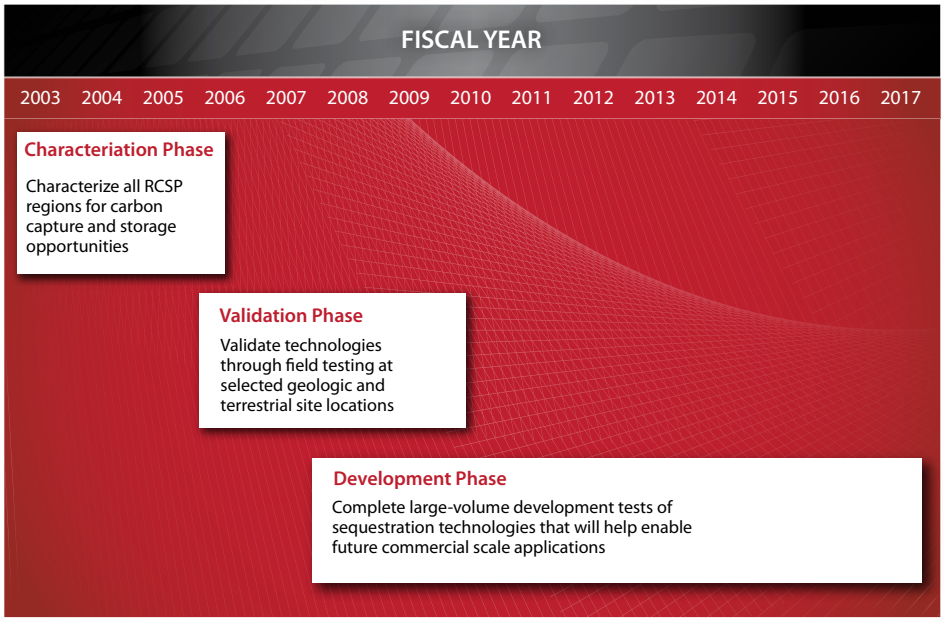

Figure 3-10. Regional Carbon Sequestration Partnership Phases

injection. These activities were combined with RCSP public outreach and education programs to establish the viability of CCS as an option to mitigate CO_2 emissions. Additionally, the RCSPs gathered site-specific geologic and terrestrial data needed for the Validation and Development Phases and identified additional data requirements for conducting field tests. This knowledge enhanced the capability to characterize and prioritize geologic storage opportunities when matching potential target storage sites with CO_2 emission sources. The RCSPs worked together to establish common assumptions, data requirements, and methodologies for determining geologic resource estimates for CO_2 storage. Results are presented in DOE's Carbon Sequestration Atlas of the United States and Canada (Third Edition published December 2010). The data provided by the RCSPs are included in the National Carbon Sequestration Database and Geographical Information Systems (NATCARB), a relational database and geographic information system that integrates CCS data from the RCSPs and various other sources. NATCARB provides a national view of the carbon storage potential in the United States and Canada.

2. Validation Phase

The Validation Phase started in 2005 to focus on developing CO_2 storage field tests to validate the efficacy of CCS technologies in a variety of geologic and terrestrial sinks throughout the United States and Canada. The field tests being conducted during the Validation Phase address the following goals:

- Collect physical data to confirm capacity and injectivity estimates made during the Characterization Phase.
- Validate the effectiveness of simulation models to predict and MVA technologies to measure CO_2 movement in the geologic formations and confirm the integrity of the seals and indirect storage in terrestrial ecosystems.
- Develop guidelines for well completion, operations, and abandonment in order to maximize storage potential and mitigate leakage.
- Develop strategies for optimizing storage capacity for various reservoir types.
- Develop public outreach strategies and communicate the benefits of CCS to various stakeholders.
- Satisfy the regulatory permitting requirements for CCS projects.

The RCSPs applied the knowledge and results of Characterization Phase activities to identify promising opportunities for CCS in their respective regions during the Validation Phase. As a result, more than 20 geologic field tests and 11 terrestrial field tests have been initiated. The RCSPs are continuing their efforts to characterize their regional geologic CO_2 storage opportunities by using the results of the field projects and collecting additional data on storage formations. Detailed information on the RCSP field team activities is presented in Figure 3-11a and b, which illustrates all of the pilot-scale tests conducted in tandem between the RCSPs and their commercial partners to inject CO_2 into saline formations, depleted oil and gas reservoirs for EOR and EGR, and coal seams for ECBM applications. (Note: Project No. 20 was cancelled during third quarter 2010.) In the end, the RCSPs are applying the injectivity and storage potential characteristics of these geologic sites to Development Phase activities.

3. Development Phase

DOE has been planning to conduct large-scale field testing of CO_2 injection into geologic formations since 2003, the initial year of the RCSP effort. Development Phase project development is based upon the information generated in the Characterization and Validation Phases, which has provided a significant body of scientific knowledge regarding CO_2 injection into geologic formations. Thus, the work to be conducted in the Development Phase is a logical continuation of earlier efforts. The large-scale field tests are necessary to validate and improve model predictions concerning the behavior of injected CO_2 at scale, establish the engineering and scientific processes for successfully implementing and validating long-term safe storage of sequestered carbon, and achieve cost-effective integration with power plants and other large emission sources for capture. The RCSPs will place emphasis on MVA protocols and risk assessment frameworks that will provide detailed information on the dynamics of the systems being studied.

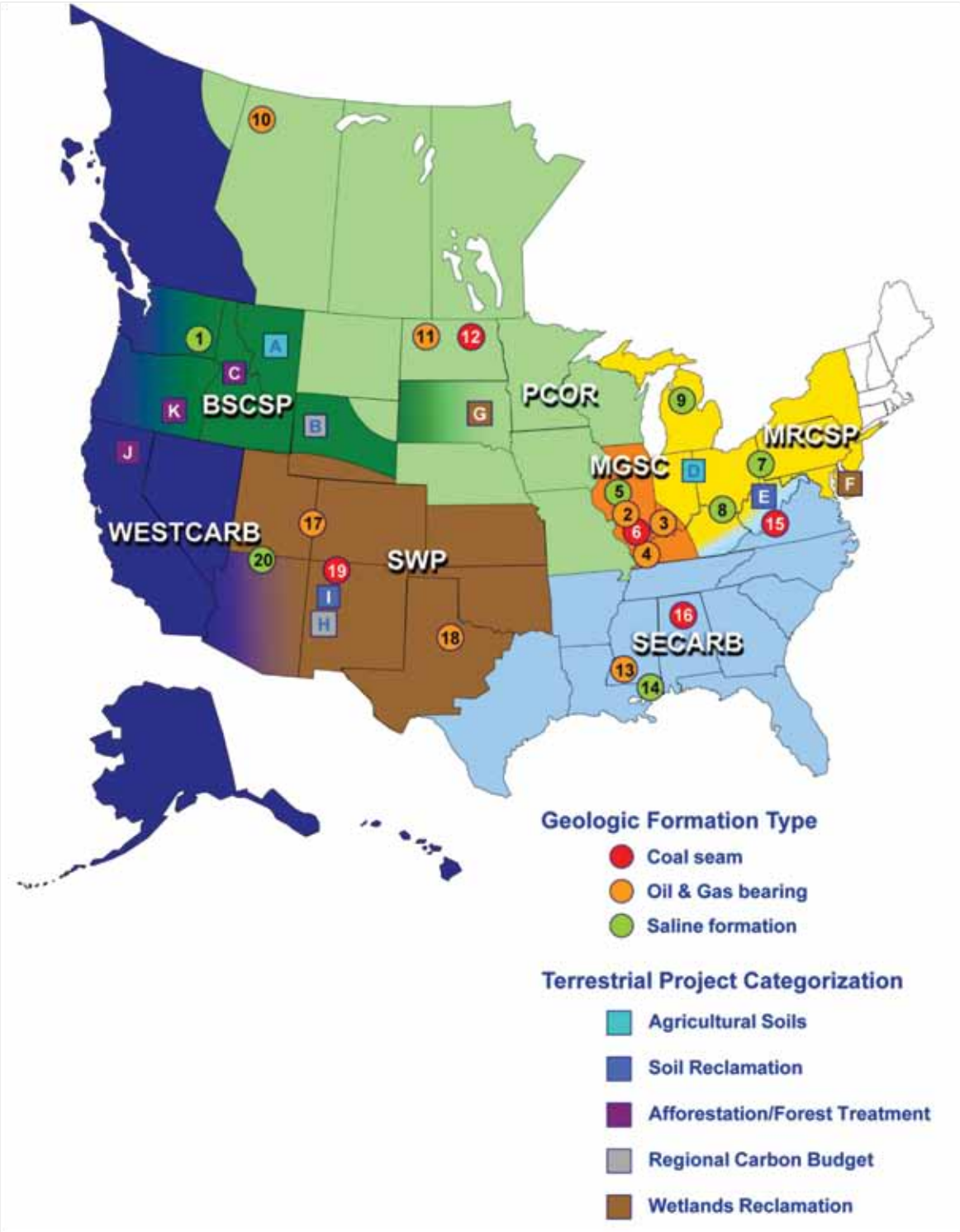

Figure 3-11a. RCSP Validation Phase Tests

	Partnership	Geologic Province/ Location	Geologic		Terrestrial
			Total CO_2 Injection (metric tons CO_2)	Approximate Depth (feet)	Estimated CO_2 Storage Potential
1		Columbia Basin	0	2,500 – 4,000	
A	Big Sky Carbon Sequestration Partnership	North Central MT			60 Mt over 20 years
B		Eastern WY			30 Mt over 10 years
C		Region-wide			640–1,040 Mt over 80 years
2	MGSC	Illinois Basin–Loudon Field	< 39	1,550	
3		Illinois Basin–Mumford Hills Field	3,375	1,551	
4		Illinois Basin–Sugar Creek Field	6,500	1,548	
5		Illinois Basin*	*	7,200	
6		Illinois Basin	91	1,000	
7	MRCSP Midwest Regional Carbon Sequestration Partnership	Appalachian Basin	< 50	5,900 – 8,300	
8		Cincinnati Arch	1,000	3,200 – 3,500	
9		Michigan Basin	60,000	3,200 – 3,500	
D		Region-wide			25 Mt over 20 years
E		Region-wide			100 Mt over 20 years
F		Cambridge, MD			TBD
10	PCOR Partnership	Alberta Basin–Zama Field	25,400	4,900	
11		Williston Basin–Norhwest Field	400	8,050	
12		Williston Basin	80	1,100	
G		Great Plains wetlands complex (PPR)			14.4 Mt
13	SECARB Southeast Regional Carbon Sequestration Partnership	Gulf Coast–Cranfield	627,744	10,300–10,400	
14		Mississippi Coastal Plain	2,740	8,600	
15		Central Appalachian	907	1,600 – 2,300	
16		Black Warrior Basin	252	1,500 – 2,500	
17	SWP	Paradox Basin–Aneth Field	630,000	5,600 – 5,800	
18		Permian Basin–Sacroc Unit	86,000	5,800	
19		San Juan Basin	16,700	3,000	
H		Region-wide			TBD
I		San Juan Basin Coal Fairway (Navajo City, NM)			TBD
20	West Coast Regional Carbon Sequestration Partnership westcarb.org	Colorado Plateau	0	4,000	
J		Shasta County, CA			4,600 Mt over 80 years (CA)
K		Lake County, OR			900 Mt over 80 years (OR)

* Site was moved to Development Phase injection.

Information current as of June 2010

Figure 3-11b. RSCP Validation Phase Tests – Key

The Development Phase field tests will be implemented in three stages that will follow a sequential set of project steps:

- Site selection, characterization, National Environmental Policy Act (NEPA) compliance, permitting, and infrastructure development.
- CO_2 injection and monitoring operations.
- Site closure and post-injection monitoring.

The planned schedule of research stages for the Development Phase is presented in Figure 3-12.

Tests during the Development Phase involve the injection of 1 million tons or more of CO_2 into a range of geologic formations. Each formation is considered a major storage reservoir in its RCSP region. These formations are expected to have the potential to store hundreds of years of stationary source CO_2 emissions.

Development Phase tests will establish at large scale that CO_2 capture, transport, injection, and storage can be achieved safely and permanently with a more defined understanding of the associated costs. Tests during the Development Phase will address practical issues such as sustainable injectivity, well design for both integrity and increased capacity, and reservoir behavior with respect to prolonged injection. Regional variations among the RCSPs will provide vitally important information and experience as they explore a variety of technologies and geologic settings.

Results obtained from these efforts will provide the foundation for commercialization efforts for future, large-scale CCS field tests across North America and will address future challenges associated with public acceptance, infrastructure (pipelines, compressor stations, etc.), and an acceptable regulatory framework.

These initial large-scale projects represent the first step toward validating that CCS technologies can be deployed commercially through the United States. Additional large-scale CCS projects will be necessary to validate storage projects integrated with carbon capture technologies and storage in additional geologic classifications not having sufficient testing conducted.

During the Development Phase, the RCSPs will strive to produce technical results to validate that CCS can be conducted at commercial scale. To this end, the RCSPs aim to achieve a number of key goals during the Development Phase that relate to the lifecycle of their projects. Attainment of these goals is not an end product of the Development Phase, but instead will be achieved during all project phases including site selection, site characterization, permitting, CO_2 procurement, transportation, injection operations, monitoring, modeling, site closure, and post-closure monitoring and assessment. The goals that have been established for the RCSPs include:

- Goal 1: Prove Adequate Injectivity and Available Capacity – This goal will validate that storage capacity and injectivity are sufficiently present in regionally significant geologic formations to scale-up for commercial projects.
- Goal 2: Prove Storage Permanence – The RCSPs will validate that CO_2 will be contained in the target formations and not impact USDWs and/or release to the atmosphere.
- Goal 3: Determine Areal Extent of Plume and Potential Leakage Pathways – The RCSPs will monitor the areal extent and vertical migration of the CO_2 during and after project completion. The RCSPs will develop methodologies to determine the presence/absence of leakage pathways such that the proposed mitigation strategy can sustain a near-zero leakage.
- Goal 4: Develop Risk Assessment Strategies – The RCSPs will identify risk parameters, probability, and potential impact of occurrence, as well as develop mitigation strategies.
- Goal 5: Develop Best Practices – The RCSPs will develop BPMs for site selection, characterization, operational, and closure practices.

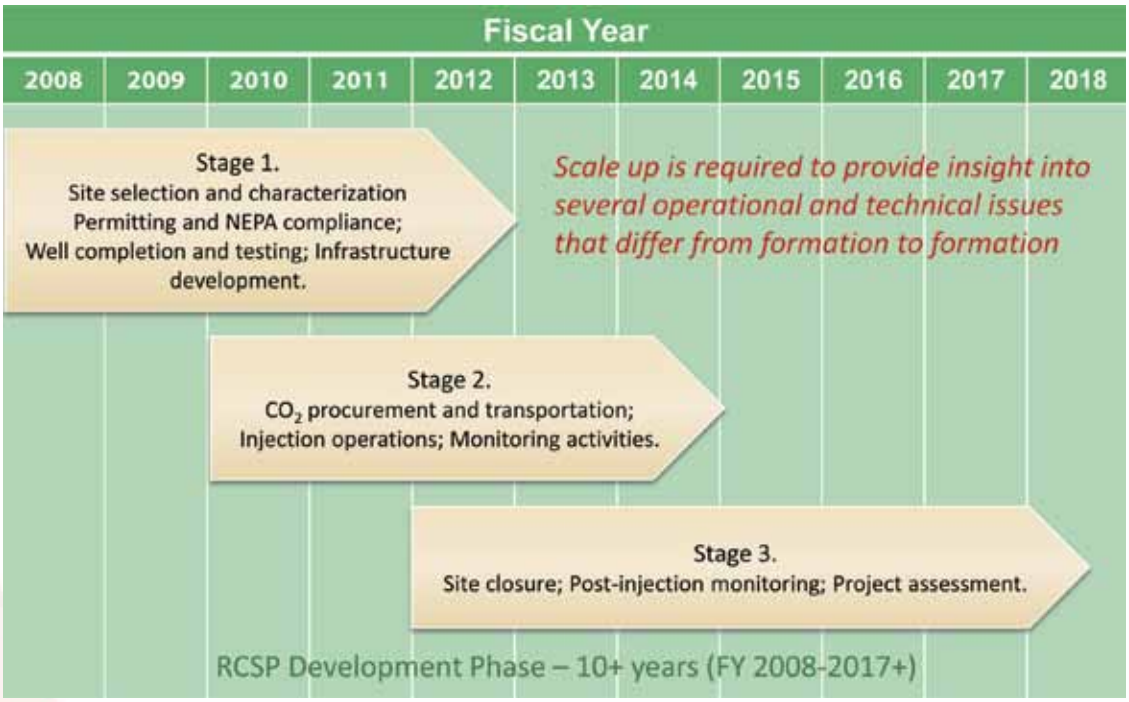

Figure 3-12. Approximate Timeline for RCSP Development Phase and Research Stages

- Goal 6: Engage in Public Outreach and Education – The RCSPs will engage and educate the public about CCS.
- Goal 7: Contribute to the Improvement of Permitting Requirements – The RCSPs will engage in the development of an effective regulatory and legal framework for the safe, long-term injection and geologic storage of GHGs.

4. Education and Outreach

Developing public support for CCS is an essential component of the RCSP initiative. In order to improve acceptance of CCS, increased education and awareness are needed by the general public, regulatory agencies, policymakers, and industry officials to foster the future commercial deployment of advanced CCS technology.

Like many RD&D projects, the RCSPs have a unique outreach component. In order to engage regulators, policymakers, citizens, and other stakeholders, the RCSPs utilize innovative outreach approaches to communicate to a wide range of audiences at the Federal, state, and local levels. Particular importance is focused on increasing the public's awareness and understanding of CCS technology, leading to the successful implementation of CCS projects in their regions. Outreach leaders realize that public acceptance of CCS is a critical component to any project, and concerns raised by the public need to be addressed quickly and accurately. These outreach approaches include, but are not limited to public meetings; websites; fact sheets; video; education programs available at local libraries, schools, and businesses; and emerging communication technologies. Ultimately, public support for CCS will heighten recognition of CCS as a viable option for reducing GHG emissions.

F. International CO_2 Storage Activities.

The seven RCSPs, as well as international research projects, are currently injecting or have plans to inject large quantities of CO_2 into saline formations or depleted oil and gas reservoirs for enhanced recovery/sequestration operations.

Table 3-2 presents a list of the international CCS research projects. The trapping mechanisms, flow patterns, and interaction with the target formation lithology and fluids are being documented extensively and offer opportunities to conduct research at these field sites that would be impossible to duplicate in the laboratory. DOE's investments in these projects provide opportunities for technical transfer of knowledge and protocols for CCS project development between participating nations.

Table 3-2. International CCS Research Projects

DOE'S GLOBAL CCS PROJECT INVOLVEMENT					
Location	Operations	U.S. Invol.	Reservoir	Operator/Lead	Int'l Recognition
North America, Canada Saskatchewan **Weyburn-Midale**	1.8 Mt CO_2/yr commercial 2000	2000-2011	oil field carbonate EOR	Cenovus Energy, Apache	IEA GHG R&D Programme, CSLF
North America, Canada Alberta **Zama oil field**	250,000 tons CO_2, 90,000 tons H2S demo	2005-2009	oil field carbonate EOR	Apache (Reg. Part.)	CSLF
North America, Canada British Columbia **Fort Nelson**	>1 Mt CO_2/yr 1.8 Mt acid gas/yr large-scale demo	2009-2015	saline formation	Spectra Energy (Reg. Part.)	CSLF
Europe, North Sea, Norway **Sleipner**	1 Mt CO_2/yr commercial 1996	2002-2011	marine sandstone	StatoilHydro	IEA GHG R&D Programme, CSLF, European Commission
Europe, North Sea, Norway **Snovhit CO_2 Storage**	700,000 tonnes CO_2 commercial 2008	2009-TBD	marine sandstone	StatoilHydro	
Europe, Germany **CO_2SINK, Ketzin**	60,000 tonnes CO_2 demo 2008	2007-2010	saline formation	GeoForsch-ungsZentrum, Potsdamn(GFZ)	CSLF, European Commission, IEA GHG R&D Programme
Australia, Victoria **Otway Basin**	100,000 tonnes CO_2 demo 2008	2005-2010	gas field sandstone	CO_2CRC	CSLF
Africa, Algeria **In Salah gas**	1 Mt CO_2/yr commercial 2004	2005-2010	gas field sandstone	BP, Sonatrach, StatoilHydro	CSLF, European Commission
Asia, China **Ordos Basin**	assessment phase CCS	2008-TBD	Ordos Basin	Shenhua Coal	

GLOSSARY

ABC	ammonium bicarbonate
AC	ammonium carbonate
AEP	American Electric Power
AR	Advanced Research
ARPA-E	Advanced Research Projects Agency–Energy
ASU	air separation unit
BPM	Best Practice Manual
BSCSP	Big Sky Carbon Sequestration Partnership
BSF	boiler simulation facility
Btu	British thermal unit
CBM	coalbed methane
CCPI	Clean Coal Power Initiative
CCS	carbon capture and storage
CFD	computational fluid dynamics
CLC	chemical looping combustion
CLG	chemical looping gasification
CO	carbon monoxide
CO_2	carbon dioxide
CO2CRC	Australia's Cooperative Research Centre for Greenhouse Gas Technologies
COE	cost of energy
CRC	Carbon Research Center
CSLF	Carbon Sequestration Leadership Forum
DARPA	Defense Advanced Research Projects Agency
DOE	Department of Energy
ECBM	enhanced coalbed methane
EERC	Energy and Environmental Research Center
EGR	enhanced gas recovery
EIA	Energy Information Administration
EOR	enhanced oil recovery
EPA	U.S. Environmental Protection Agency
EPEC	Existing Plants, Emissions, and Capture
EPRI	Electric Power Research Institute
FE	Office of Fossil Energy
FEPs	features, events, and processes
GHG	greenhouse gas
GIS	geographical information system
H_2	hydrogen
H_2O	water
H_2S	hydrogen sulfide
Hg	mercury
ICCS	Industrial Carbon Capture and Storage
IEA	International Energy Agency
IEP	Innovations for Existing Plants
IGCC	integrated gasification combined cycle
IL	ionic liquid
IMPACCT	Innovative Materials & Processes for Advanced Carbon Capture Technologies
InSAR	Interferometric Synthetic Aperture Radar
IPCC	International Panel on Climate Change
ITM	ion transport membranes
LANL	Los Alamos National Laboratory
LCOE	levelized cost of energy
MEA	monoethanolamine
MGSC	Midwest Geological Sequestration Consortium
MOF	metal organic framework
MRCSP	Midwest Regional Carbon Sequestration Partnership
MVA	monitoring, verification, and accounting
MW	megawatt
MWe	megawatt electric

N_2	nitrogen
NATCARB	National Carbon Sequestration Database and Geographical Information System
NCCC	National Carbon Capture Center
NETL	National Energy Technology Laboratory
NGCC	natural gas combined cycle
NO_x	nitrogen oxides
O_2	oxygen
ORD	Office of Research and Development
OPPA	Office of Program Planning & Analysis
OTM	oxygen transport membranes
PBI	polybenzimidazole
PC	pulverized coal
PCOR	Plains CO_2 Reduction Partnership
PM	particulate matter
PNNL	Pacific Northwest National Laboratory
PSA	pressure swing adsorption
PSDF	Power Systems Development Facility
psia	pounds per square inch absolute
RCSP	Regional Carbon Sequestration Partnership
RD&D	research, development, and deployment
Recovery Act	American Recovery and Reinvestment Act of 2009
RUA	Regional University Alliance
scfm	standard cubic feet per minute
SCR	selective catalytic reduction
SECA	Solid State Energy Conversion Alliance
SECARB	Southeast Regional Carbon Sequestration Partnership
SNG	substitute natural gas
SO_2	sulfur dioxide
SOFC	solid oxide fuel cell
SO_x	sulfur oxides
SWP	Southwest Regional Partnership on Carbon Sequestration
Syngas	synthesis gas
TSA	temperature swing adsorption
UIC	Underground Injection Control
UNDEERC	University of North Dakota Energy & Environmental Research Center
USDW	Underground Sources of Drinking Water
USGS	U.S. Geological Survey
VPSA	vacuum pressure swing adsorption
WESTCARB	West Coast Regional Carbon Sequestration Partnership
WGS	water-gas-shift

FOR MORE INFORMATION

National Energy Technology Laboratory
http://www.netl.doe.gov/sequestration

U.S. Department of Energy, Office of Fossil Energy
http://www.doe.gov/sciencetech/carbonsequestration.htm

Carbon Sequestration Leadership Forum
http://www.cslforum.org

National Carbon Sequestration Database and Geographical Information System
http://www.natcarb.org

Big Sky Carbon Sequestration Partnership
http://www.bigskyco2.org

Midwest Geological Sequestration Consortium
http://www.sequestration.org

Midwest Regional Carbon Sequestration Partnership
http://www.mrcsp.org

Plains CO_2 Reduction Partnership
http://www.undeerc.org/pcor

Southeast Regional Carbon Sequestration Partnership
http://www.secarbon.org

Southwest Regional Partnership on Carbon Sequestration
http://www.southwestcarbonpartnership.org

West Coast Regional Carbon Sequestration Partnership
http://www.westcarb.org

If you have any questions, comments, or would like more information about the DOE/NETL Carbon Capture and Storage RD&D effort, please contact the following persons:

U.S. Department of Energy
Office of Fossil Energy
National Energy Technology Laboratory
Strategic Center for Coal

Jared Ciferno
412-386-5862
jared.ciferno@netl.doe.gov

John Litynski
412-386-4922
john.litynski@netl.doe.gov

Sean Plasynski
412-386-4867
sean.plasynski@netl.doe.gov

U.S. Department of Energy
Office of Fossil Energy
Office of Clean Energy Systems

Darren Mollot
301-903-5471
darren.mollot@hq.doe.gov

William Fernald
301-903-9448
william.fernald@hq.doe.gov

Mark Ackiewicz
301-903-3913
mark.ackiewicz@hq.doe.gov

REFERENCES

[1] Report of the Interagency Task Force on Carbon Capture and Storage, August 2010. http://www.fe.doe.gov/programs/sequestration/ccs_task_force.html

[2] 2010 Carbon Sequestration Atlas of the United States and Canada, Third Edition, DOE/NETL, December 2010. http://www.netl.doe.gov/technologies/carbon_seq/refshelf/atlasIII/

[3] Geologic Storage Formation Classifications: Understanding Its Importance and Impacts on CCS Opportunities in the United States, DOE/NETL-2010/1420, September 2010. http://www.netl.doe.gov/technologies/carbon_seq/refshelf/Geologic_Storage.pdf

[4] Moritis, G., (2003). CO_2 Sequestration Adds New Dimension to Oil, Gas Production, Oil and Gas Journal, Vol. 101.9, March 3, 2003. 39-44.

[5] Impact of Impurities on CO_2 Capture, Transport and Storage, IEA Greenhouse Gas R&D Programme, Prepared by SNC-Lavalin, Inc., Report Number PH4/32, August 2004

[6] Carbon Dioxide Capture from Existing Coal-Fired Power Plants, DOE/NETL-401/110907, Revised November 2007. http://www.netl.doe.gov/energy-analyses/pubs/CO_2%20Retrofit%20From%20Existing%20Plants%20Revised%20November%202007.pdf.

[7] Water Requirements for Existing and Emerging Thermoelectric Plant Technologies, DOE/NETL-402/080108, Revised April 2009. http://www.netl.doe.gov/energy-analyses/pubs/WaterRequirements.pdf

[8] Presidential Memorandum -- A Comprehensive Federal Strategy on Carbon Capture and Storage, February 3, 2010. http://www.whitehouse.gov/the-press-office/presidential-memorandum-a-comprehensive-federal-strategy-carbon-capture-and-storage

[9] Coal-Fired Power Plants in the United States: Examination of the Costs of Retrofitting with CO_2 Capture Technology and the Potential for Improvements in Efficiency, DOE/NETL-402/102309, Revised January 2010. http://www.netl.doe.gov/energy-analyses/pubs/GIS_CCS_retrofit.pdf

THIS PAGE INTENTIONALLY LEFT BLANK

National Energy Technology Laboratory (NETL)
U.S. Department of Energy

Albany Location:
1450 Queen Avenue SW
Albany, OR 97321-2198
541.967.5892

Fairbanks Location:
2175 University Avenue South
Suite 201
Fairbanks, AK 99709
907.452.2559

Morgantown Location:
3610 Collins Ferry Road
P.O. Box 880
Morgantown, WV 26507-0880
304.285.4764

Pittsburgh Location:
626 Cochrans Mill Road
Pittsburgh, PA 15236-0940
412.386.4687

Tulsa Location:
One West Third Street
Suite 1400
Tulsa, OK 74103-3519
918.699.2000

Customer Service
1.800.553.7681

Website
www.netl.doe.gov

DOE/NETL Carbon Dioxide Capture and Storage RD&D Roadmap

December 2010